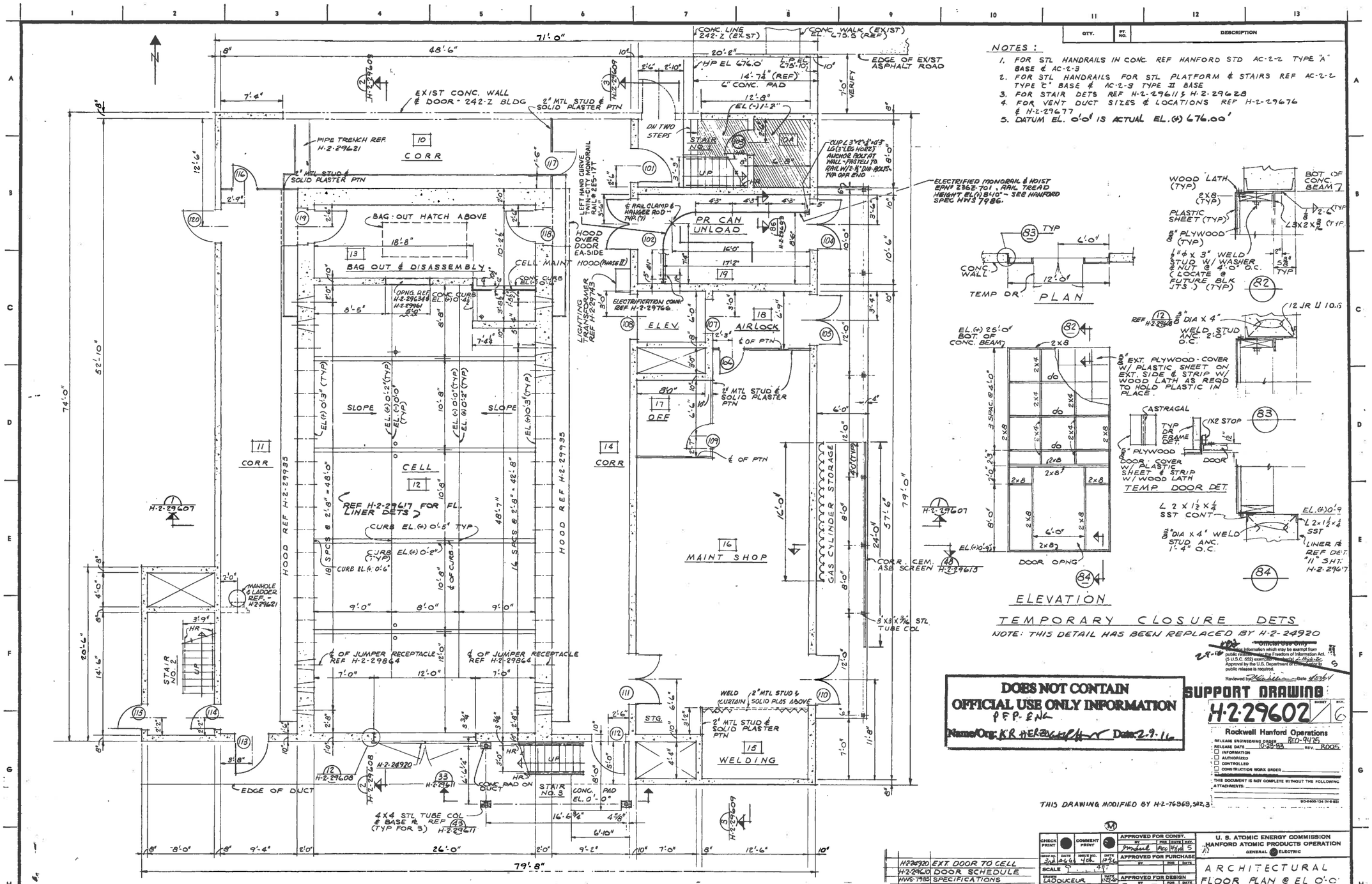

NOTES:

1. FOR STL HANDRAILS IN CONC. REF HANFORD STD AC-2-2 TYPE "A" BASE & AC-2-3
2. FOR STL HANDRAILS FOR STL PLATFORM & STAIRS REF AC-2-2 TYPE "C" BASE & AC-2-3 TYPE II BASE
3. FOR STAIR DETS REF H-2-29611 & H-2-29628
4. FOR VENT DUCT SIZES & LOCATIONS REF H-2-29676 & H-2-29677
5. DATUM EL. 0'0" IS ACTUAL EL.(+) 676.00'

QTY.	PT. NO.	DESCRIPTION

TEMPORARY CLOSURE DETS

NOTE: THIS DETAIL HAS BEEN REPLACED BY H-2-24920

Official Use Only

Contains information which may be exempt from public release under the Freedom of Information Act (5 U.S.C. 552) exemption number(s) 2, 4, 5, 6, 7c. Approval by the U.S. Department of Energy prior to public release is required.

Reviewed by ____ Date 4/27/94

DOES NOT CONTAIN OFFICIAL USE ONLY INFORMATION
PFP-ENG
Name/Org: KR HERZOG/PFP Date: 2-9-16

SUPPORT DRAWING
H-2-29602 SHEET / REV. 6

Rockwell Hanford Operations
RELEASE ENGINEERING ORDER REO-9475
RELEASE DATE 10-25-93 REV. R005
☐ INFORMATION
☐ AUTHORIZED
☐ CONTROLLED
☐ CONSTRUCTION WORK ORDER
THIS DOCUMENT IS NOT COMPLETE WITHOUT THE FOLLOWING ATTACHMENTS:
90-5605-134 (11-8-93)

THIS DRAWING MODIFIED BY H-2-76368, 5, 12, 3

NO.	DESCRIPTION	REV. BY DATE	APP'D BY	FOR	DATE
6	ECN 185810 REVISED PER CED 40506	NWK 6/20/93			8-11-93

REVISIONS

REV. NO.	DWG. NO.	DRAWING TITLE
	H-24920	EXT. DOOR TO CELL
	H-2-29610	DOOR SCHEDULE
	HWS-7985	SPECIFICATIONS
	H-2-29676	VENT FIRST & SECOND FL. PLAN
	H-2-29611	ARCH - STL STAIR DETS
	AC-2-3	HANFORD STD - HR STAIRS
	AC-2-2	HANFORD STD - HR PLATF

REFERENCE DRAWINGS
NEXT USED ON H-2-29600

CHECK PRINT	COMMENT PRINT
SHEET NO. H-2-29602	DATE 4-6-94
SHEET NO. 4-6-94	DATE 10-8-93
SCALE 1/4" = 1'-0"	
DRAWN LADOUCEUR	DATE 1-22-60
CHECKED R. J. H.	DATE 1-26-60
DESIGN	DATE 1-26-60
	DATE 1-26-60
	DATE 1-26-60
CLASSIFICATION NO. 380/12342	
CLASSIFIED BY	
DATE 12-6-60	

APPROVED FOR CONST.

BY	FOR	DATE	REV.
	REO	4/6/94	5

APPROVED FOR PURCHASE

BY	FOR	DATE

APPROVED FOR DESIGN

BY	FOR	DATE
	DEO	4-1-61
	DEO	4-12-61
	DEO	4/14/61
	DEO	4-21-61

CLASSIFICATION: NONE

U. S. ATOMIC ENERGY COMMISSION
HANFORD ATOMIC PRODUCTS OPERATION
GENERAL ELECTRIC

ARCHITECTURAL
FLOOR PLAN @ EL 0'-0"

PLUTONIUM RECLAMATION FACILITY

BLDG. NO. 236-Z INDEX NO. 0800
SYSTEM NO. H-2-29602 ENT. NO. SHEETS

QTY	FT NO	DESCRIPTION

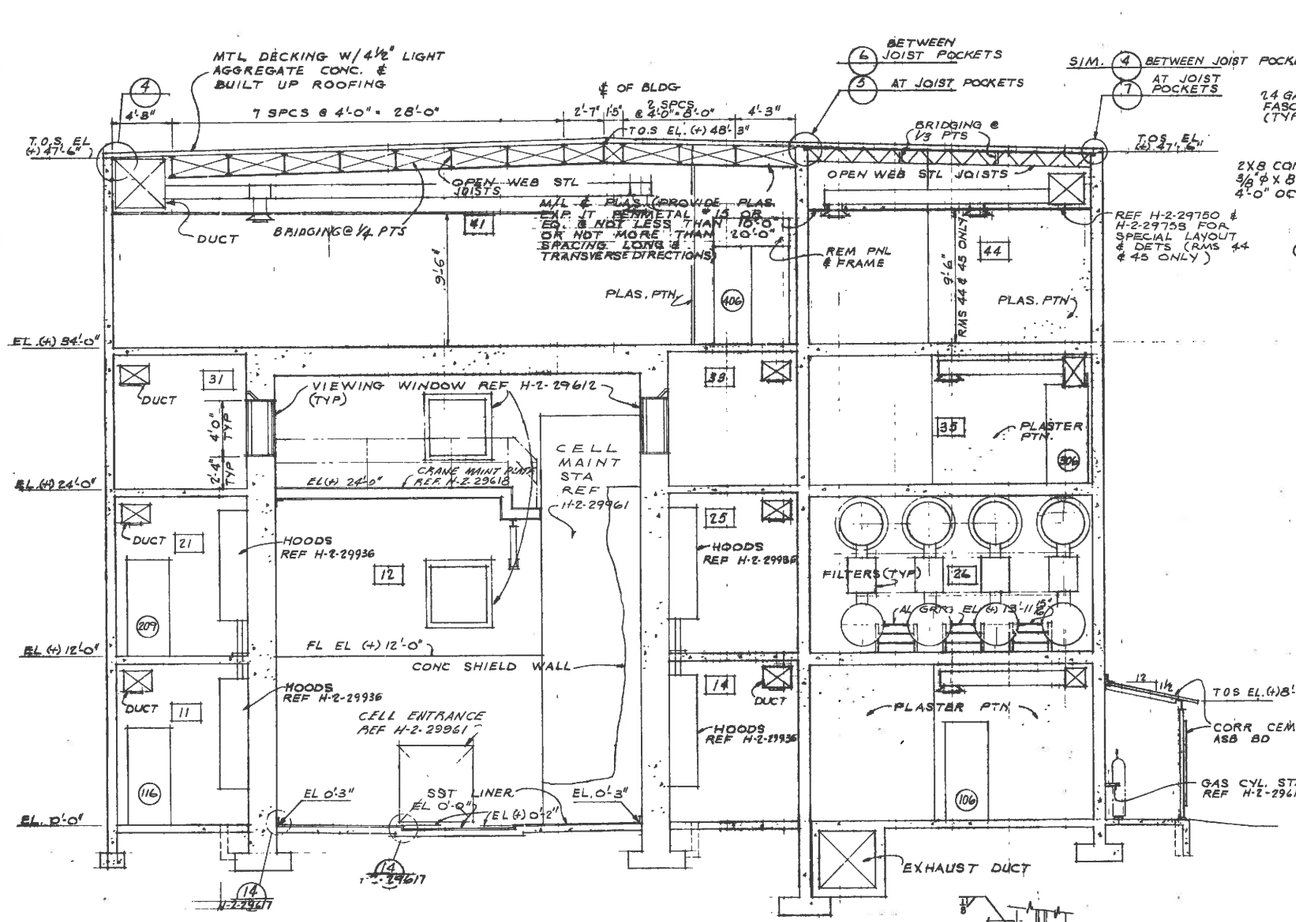

H-2-29607 · 8-9-5-6

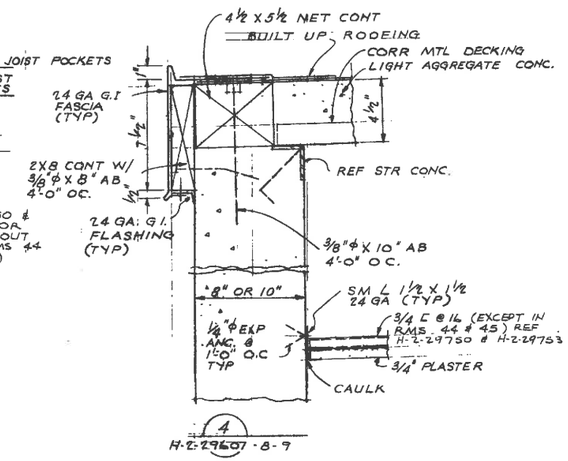

4 H-2-29607 · 8-9

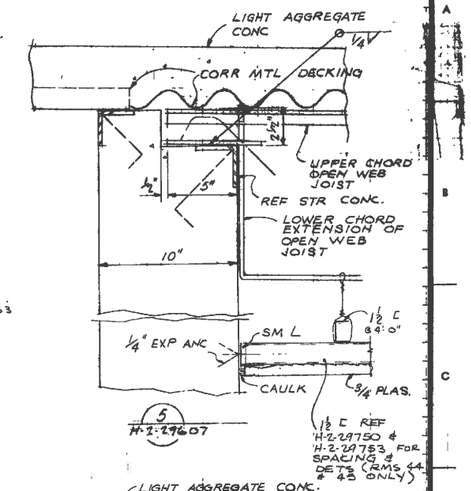

5 H-2-29607

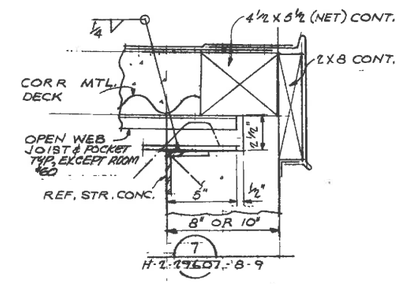

7 H-2-29607 · 8-9

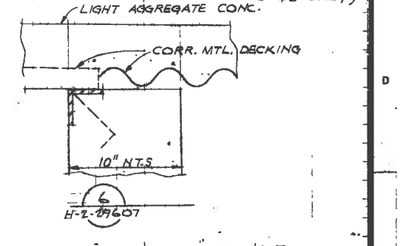

6 H-2-29607

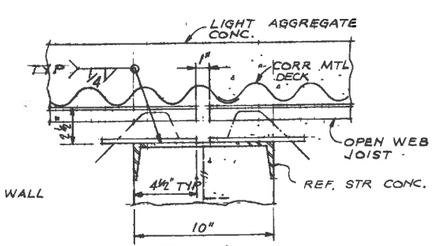

8 H-2-29608

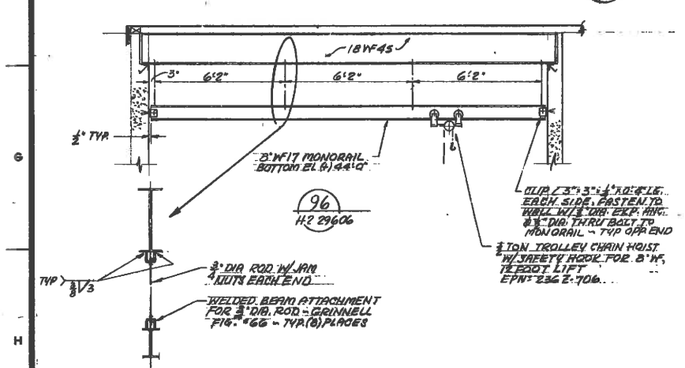

96 H-2-29606

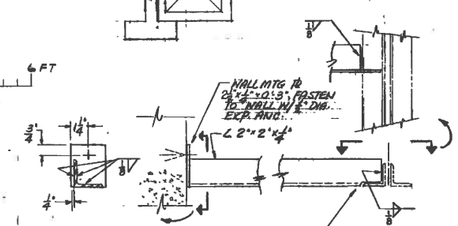

97 H-2-29606
REF. H-2-29677

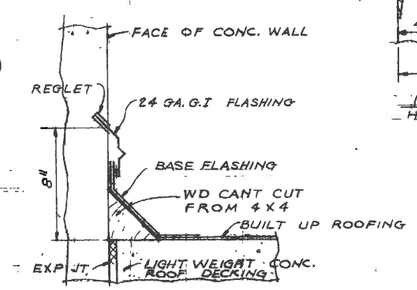

28 H-2-29608

DOES NOT CONTAIN OFFICIAL USE ONLY INFORMATION
PFP.ENG
Name/Org: K.R. Hedges Date: 2-9-16

Klk 2-9-16
Official Use Only
Contains information which may be exempt from public release under the Freedom of Information Act (5 U.S.C. 552) exemption number(s) 2, 4, 6, 9
Approval by the U.S. Department of Energy prior to public release is required.
Reviewed by: Date:

APPROVED
For Construction
Michael Hafer

H-2-29618	CRANE MAINT. PLAT FORM	
H-2-29961	CELL MAINT. HOOD	
H-2-29935	HOOD	
H-2-29612	ARCH VIEW WINDOW DETS	
H-2-29600	DRAWING INDEX	
REF DWG NO	DRAWING TITLE	
REFERENCE DRAWINGS		
NEXT USED ON		

SUPPORT DRAWING

No	DESCRIPTION	REV BY DATE	APP'D BY	FOR	DATE
6	REVISED PER ECN 185816	GAH 6/13/83			8-9-93
5	(D.I. 2901) CHECKED FOR AS BUILT	9-13-63 RDC		PO	
4	ADDED PHASE I LIMITS H-3	RCB		FEO	
	6-6 G-2 (C) ADDED DET. 97 ZONE D-9 (B) ADDED DET. 96 ZONE			DEO	
3	(A) ADDED EXCEPT ROOM 60"				
2	ADDED NOTE (B-3, C11, D8)	7-7-61			
1	GENERAL REVISIONS	6-5-61			

REVISIONS

TECHNICAL REVIEW: NONE

CHANGED BY: DATE 10/16/78

DWG NO H-2-29607 | SHEET NO — | SHEETS — | REV NO 6

SCALE: NOTED

APPROVALS	BY	FOR	DATE
DRAWN (A. DOUGLAS) DATE 7-18-60		DEO	6-6-61
CHECKED G. H. DATE 12-7-60		FEO	4-4-61
ISSUED DATE 12/7/60			4-19-61
DES ENG / PROJECT ENG			4-4-71

INST NO 12342

PROJECT NO CAC-880

U. S. ATOMIC ENERGY COMMISSION
HANFORD ATOMIC PRODUCTS OPERATION
GENERAL ELECTRIC

ARCHITECTURAL SECTION 1 AND DETAILS

PLUTONIUM RECLAMATION FACILITY

BLDG NO. 236-Z | HOME NUMBER 0801

DWG NO H-2-29607 | SHT NO | SHEETS

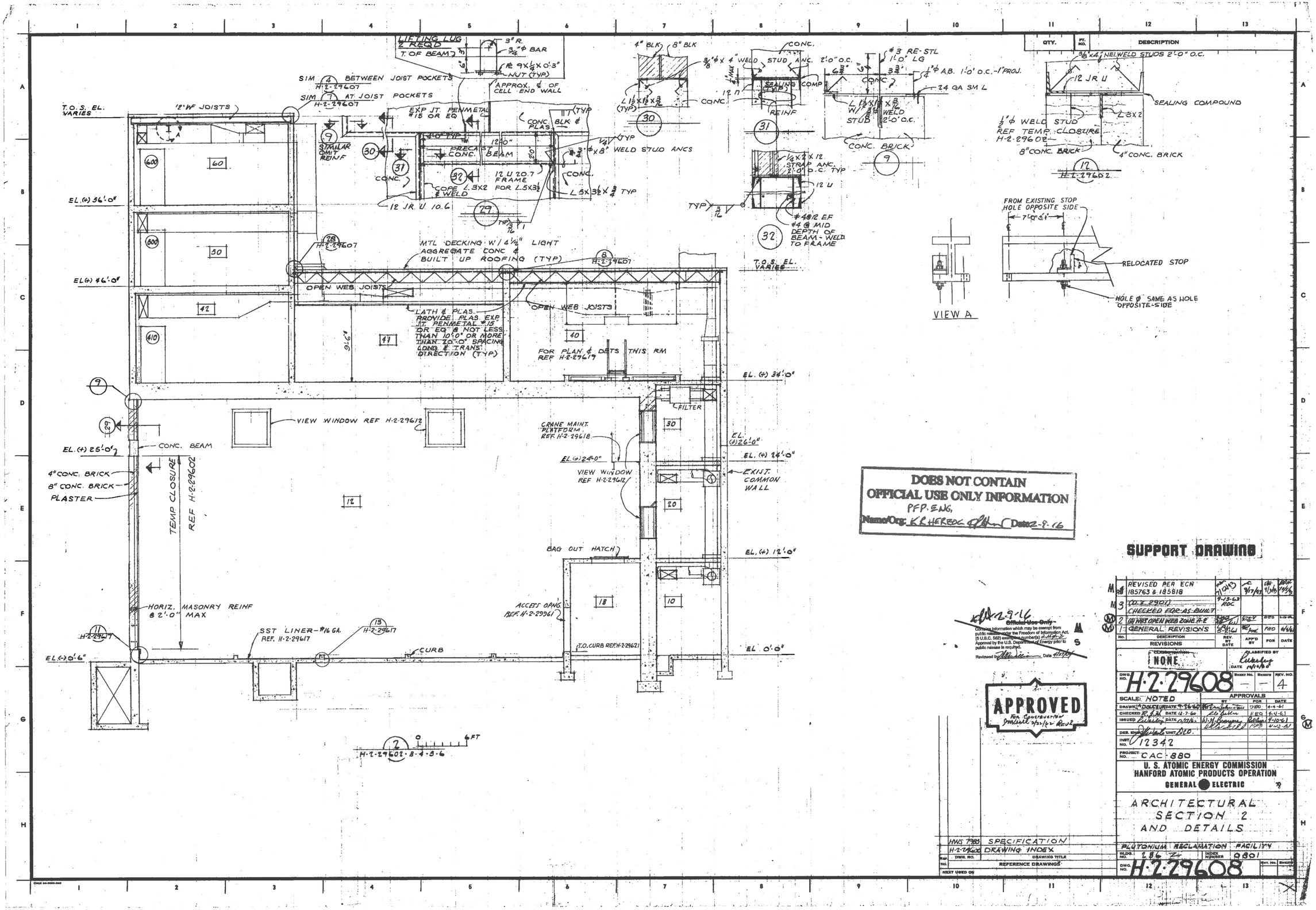

DOES NOT CONTAIN OFFICIAL USE ONLY INFORMATION
PFP. ENG.
Name/Org: K.R. HERZOG Date 2-9-16

SUPPORT DRAWING

No.	DESCRIPTION	REV. BY DATE	APP'D BY	FOR	DATE
8	REVISED PER ECN 185763 & 185818	7/12/93	9/17/93		
3	(D.X. 2901) CHECKED FOR AS-BUILT	9-13-63 RDC			
2	(A) WAS OPEN WEB ZONE A-2				
1	GENERAL REVISIONS	5-2-61		FEO	6/4/61

REVISIONS

CLASSIFICATION: NONE

CLASSIFIED BY: DATE 10/10/60

DWG. NO. H-2-29608 — SHEET NO. — SHEETS — REV. NO. 4

SCALE: NOTED

			APPROVALS BY	FOR	DATE
DRAWN	A. DOLCEUR	DATE 9-26-60		DRO	4-4-61
CHECKED	R. G. H.	DATE 12-7-60		FEO	4-4-61
ISSUED		DATE 9/17/61	W.H. Bronson		4-10-61
DES. ENG.		UNIT DCO.		FPO	4-12-61
INST. NO.	12342				
PROJECT NO.	CAC-880				

U. S. ATOMIC ENERGY COMMISSION
HANFORD ATOMIC PRODUCTS OPERATION
GENERAL ELECTRIC

ARCHITECTURAL SECTION 2 AND DETAILS

PLUTONIUM RECLAMATION FACILITY

BLDG. NO. 236 — INDEX NUMBER 0801

DWG. NO. H-2-29608

REF. NO.	DWG. NO.	DRAWING TITLE
	HWS 7985	SPECIFICATION
	H-2-29602	DRAWING INDEX

REFERENCE DRAWINGS

NEXT USED ON

2-9-16
Official Use Only
Contains information which may be exempt from public release under the Freedom of Information Act. (5 U.S.C. 552) exemption number(s) 2-14-2-2
Approval by the U.S. Department of Energy prior to public release is required.
Reviewed by: Date 4/27/61

APPROVED
For Construction
2/27/62 Rev 2

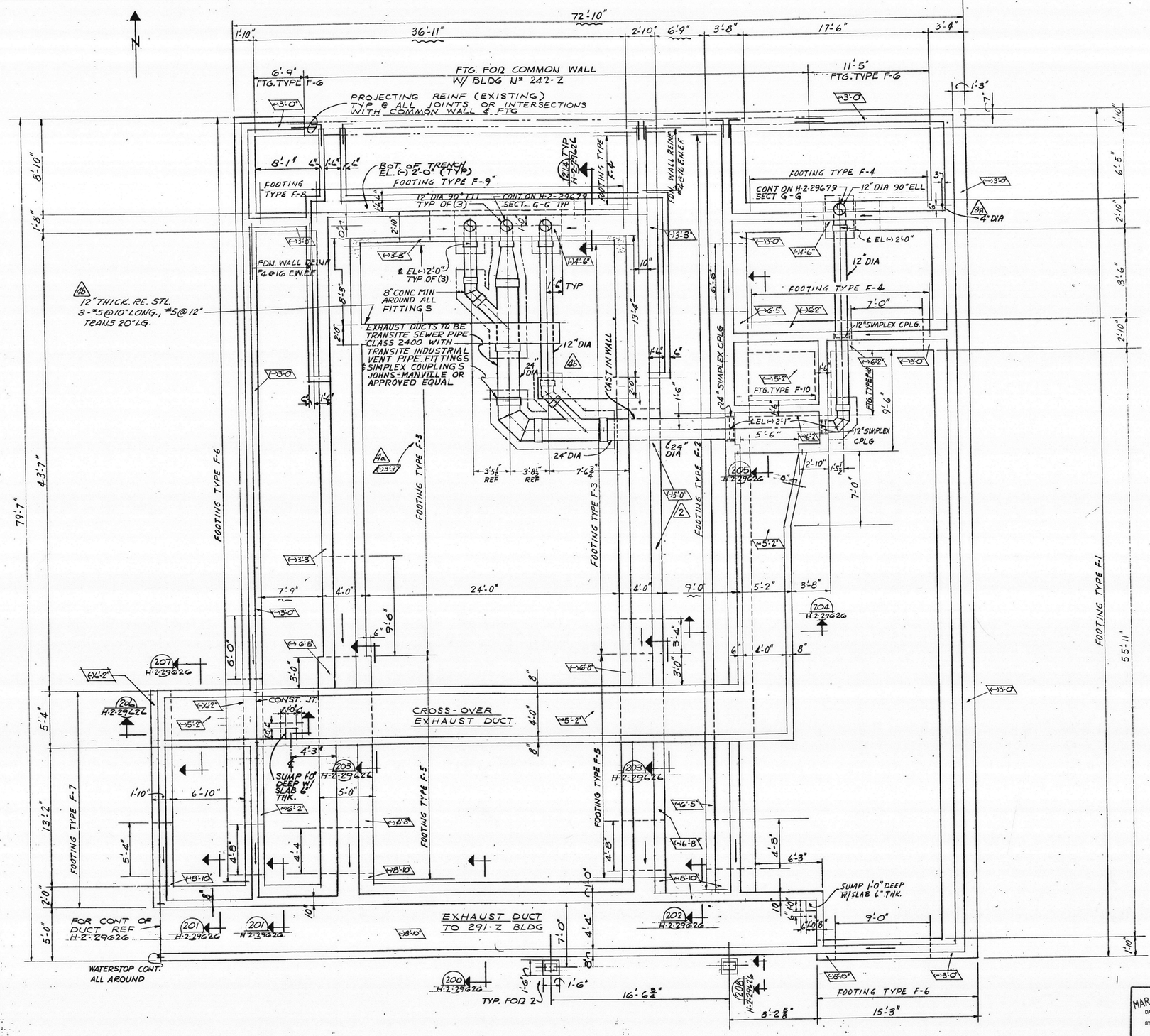

QTY.	PT. NO.	DESCRIPTION

FOOTING SCHEDULE

TYPE	EL. BOT. (SEE NOTE)	THICK.	REINFORCEMENT TRANSVERSE	REINFORCEMENT LONGITUD.
F-1	(-)3'-0"	1'-3"	#5 @ 11	3-#7
F-2	(-)6'-5"	1'-3"	#6 @ 12	3-#7
F-3	(-)3'-0"	1'-3"	#5 @ 10	3-#7
F-4	(-)3'-0"	1'-0"	#5 @ 12	2-#6
F-5	(-)6'-8"	1'-6"	#6 @ 10	3-#8
F-6	(-)3'-0"	1'-0"	#5 @ 12	2-#6
F-7	(-)6'-2"	1'-0"	#5 @ 12	2-#6
F-8	(-)3'-0"	1'-0	#5 @ 12	2-#6
F-9	(-)3'-0"	1'-3"	WALL DOWELS	2-#7
F-10	(-)6'-2"	1'-0"	WALL DOWELS	2-#5

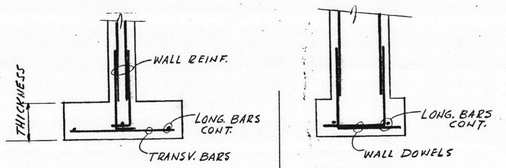

S E C T I O N S

NOTE

FOOTING ELEV. AS SHOWN IN SCHEDULE ARE TYPICAL EXCEPT AT SLOPED PORTIONS ADJACENT TO DEEPER FOOTINGS. SEE TYP. DETAIL BELOW. ON PLAN INDICATES EL. @ BOT. OF FTG. OR SLAB

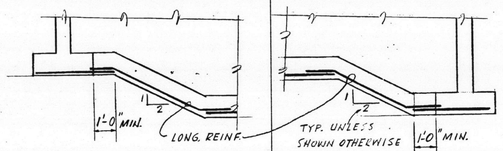

TYPICAL FOOTING DETAILS

NOTES:

1. FOR GEN'L. CONC. NOTES REF. H-2-29621.

DOES NOT CONTAIN OFFICIAL USE ONLY INFORMATION

Name/Org: K.R. HERZOG Date: 7-1-10

Official Use Only

Contains information which may be exempt from public release under the Freedom of Information Act. (5 U.S.C. 552) exemption number(s) — Approval by the U.S. Department of Energy prior to public release is required.

Reviewed by: Date 4/27/07

H-2-29620 | SHEET — | REV. 6

NO.	DESCRIPTION	REV. BY DATE	APP'D BY	CHECK FOR	DATE CHECK
6	REV PER PRO-FMP-10-44299-RD	MDB 3-9-10			
5	REVISED PER ECN 185817	MDB 2-10-95			

REVISIONS

REF. NO.	DWG. NO.	DRAWING TITLE
3	H-2-29626	CONC. SECTIONS & DET.
2	H-2-29621	CONC. PLAN @ EL. 0'-0"
1	H-2-29600	DRAWING INDEX

REFERENCE DRAWINGS

NEXT USED ON

MAR 04 2010 DATE: STA: 5 HANFORD RELEASE ID: 12

CHECK PRINT — COMMENT PRINT

APPROVED FOR CONST. — APPROVED FOR PURCHASE — APPROVED FOR DESIGN

SCALE 0 4 FT.

DRAWN D. VOGEL DATE 10-13-44

CHECKED DATE 12-7-44

ISSUED DATE 12-16-44

DES. ENGR. DATE

PROJECT CAC DIST. NO. 880 CLASSIFIED BY DATE 10/14/44

U. S. ATOMIC ENERGY COMMISSION
HANFORD ATOMIC PRODUCTS OPERATION
GENERAL ELECTRIC

STRUCTURAL CONCRETE FOUNDATION PLAN & DETAILS

PLUTONIUM RECLAMATION FACILITY

BLDG. NO. 236-Z INDEX NO. 0900

NONE

H-2-29620

POOR COPY RECEIVED

"POOR COPY RECEIVED"

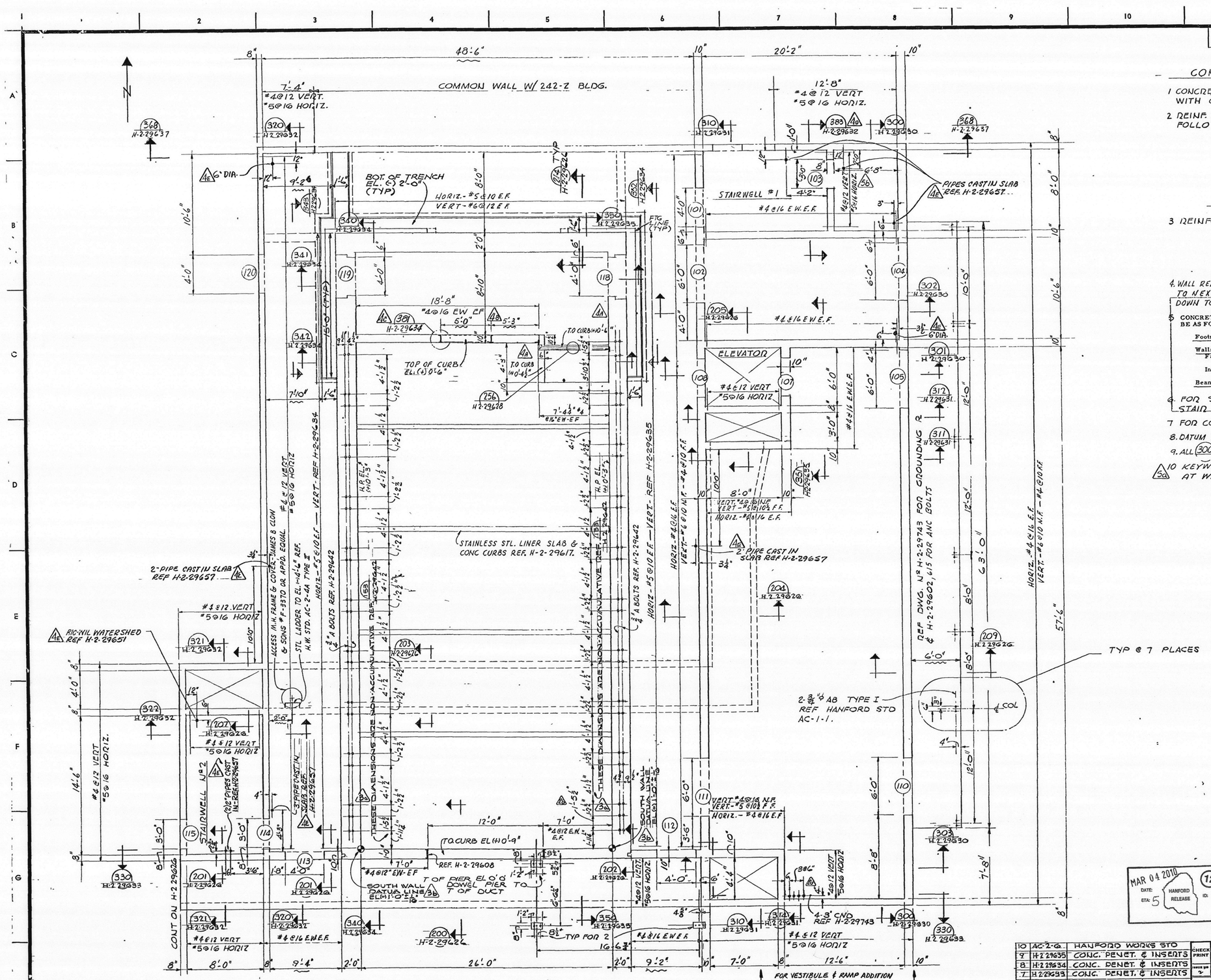

QTY	PT. NO	DESCRIPTION

CONCRETE GENERAL NOTES

1 CONCRETE & REINFORCING STL SHALL BE IN ACCORDANCE WITH CONST SPEC. HWS 7985.

2 REINF. @ CORNERS & WALL INTERSECTIONS TO BE AS FOLLOWS UNLESS OTHERWISE NOTED.

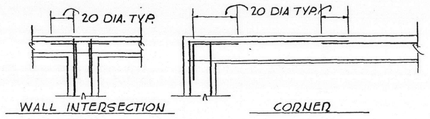

3 REINFORCING LEGEND
- E.F.-EACH FACE
- E.W.-EACH WAY
- E.W. E.F.- EACH WAY, EACH FACE
- F.F.-FAR FACE
- N.F.-NEAR FACE

4. WALL REINF. ARRANGEMENT AS SHOWN ON PLANS IS TYPICAL FROM ELEV. SHOWN TO NEXT SLAB ABOVE. REINF. ARR'G'T AS SHOWN ON PLAN @ 0'-0" IS TYPICAL DOWN TO FOOTING. FOR ADDITIONAL REINF. DETAILS SEE SECTIONS.

5 CONCRETE PROTECTION FOR REINFORCEMENT SHALL BE AS FOLLOWS UNLESS OTHERWISE NOTED:

Footings: 3" Clear Bottom and Sides	
Walls & Slabs: Faces exposed to weather or earth	2" clear #6 & over; 1-1/2" clear #5 & under
Interior or unexposed faces:	3/4" clear
Beams - Columns - Girders	1-1/2" clear to ties, stirrups, or spirals

6. FOR STAIR ARRANGEMENTS SEE ARCH DWGS. FOR CONC. STAIR & LANDING DETAILS SEE H-2-29628

7 FOR CONST JOINTS IN 24" CELL WALLS REF H-2-29634 & H-2-29635

8. DATUM ELEV. 0'-0" IS ACTUAL ELEV. 676.0

9. ALL (300) SERIES SECTIONS ARE ASSUMED TO BE CUT DIRECTLY AGAINST WALL.

10 KEYWAYS ARE REQUIRED FOR ALL CONSTRUCTION JOINTS AT WALL FLOOR SLAB INTERSECTIONS. KEYWAYS 3" DEEP.

DOES NOT CONTAIN OFFICIAL USE ONLY INFORMATION — S — Name/Org: [illegible] Date: 3-1-10

OFFICIAL USE ONLY — May be exempt from public release under the Freedom of Information Act (5 U.S.C. 552) exemption number and category: Exemption 2 - Circumvention of Statute. Department of Energy review required before public release. Name/Org: [illegible] Date: 11-21-95. Guidance (if applicable): OG-5541 Rev 4 9/2010

H-2-29621 | SHEET 1/2 | REV 8

MAR 04 2010 — DATE: — STA: 5 — HANFORD RELEASE — 12 — ID:

NO	DWG NO	DRAWING TITLE
10	AC-2-G	HANFORD WORKS STD
9	H-2-29635	CONC. PENET. & INSERTS
8	H-2-29634	CONC. PENET. & INSERTS
7	H-2-29633	CONC. PENET. & INSERTS
6	H-2-29632	CONC. PENET. & INSERTS
5	H-2-29631	CONC. PENET. & INSERTS
4	H-2-29630	CONC. PENET. & INSERTS
3	H-2-29626	CONC. SECTIONS & DET
2	H-2-29602	ARCH PLAN @ EL. 0'-0"
1	H-2-29600	DRAWING INDEX

REFERENCE DRAWINGS — NEXT USED ON

NO	DESCRIPTION	BY	DATE
7	CONTINUED ON NEW SHEET 2 21731-RO, -ROA, -ROB, -ROE REVISIONS PER HNF-FMP-04-		12-14-05
6	AND FCN 52442 REVISED PER ECN 185817	MDB	1-27-93
8	REV PER PRC-FMP-10-44299-RO		

REVISIONS

CHECK PRINT — DATE 11-7-86 — ISSUE NO 3rd — COMMENT PRINT — DATE 12-4-86

SCALE 0 1 2 3 4 FT

DRAWN R. KOGER — CHECKED Gunn — ISSUED Wiley — DES SUPV [illegible] — PROJECT CAC-880 — ISSUE NO 12342 — CLASSIFIED BY [illegible] — DATE 12/14/88

APPROVED FOR CONST — BY [illegible] — FOR Pos — DATE — REV 7

APPROVED FOR PURCHASE — BY — FOR — DATE

APPROVED FOR DESIGN — BY [illegible] — FOR CFB — DATE 4-3-61; BY [illegible] — FOR RO — DATE 1-10-61

CLASSIFICATION: NONE

U S ATOMIC ENERGY COMMISSION — HANFORD ATOMIC PRODUCTS OPERATION — GENERAL ELECTRIC

STRUCTURAL CONCRETE PLAN @ EL. 0'-0"

PLUTONIUM RECLAMATION FACILITY

BLDG NO. 236-Z — INDEX NO. 0900 — DWG NO. H-2-29621 — SHEET NO. — REV NO.

12 POOR COPY RECEIVED

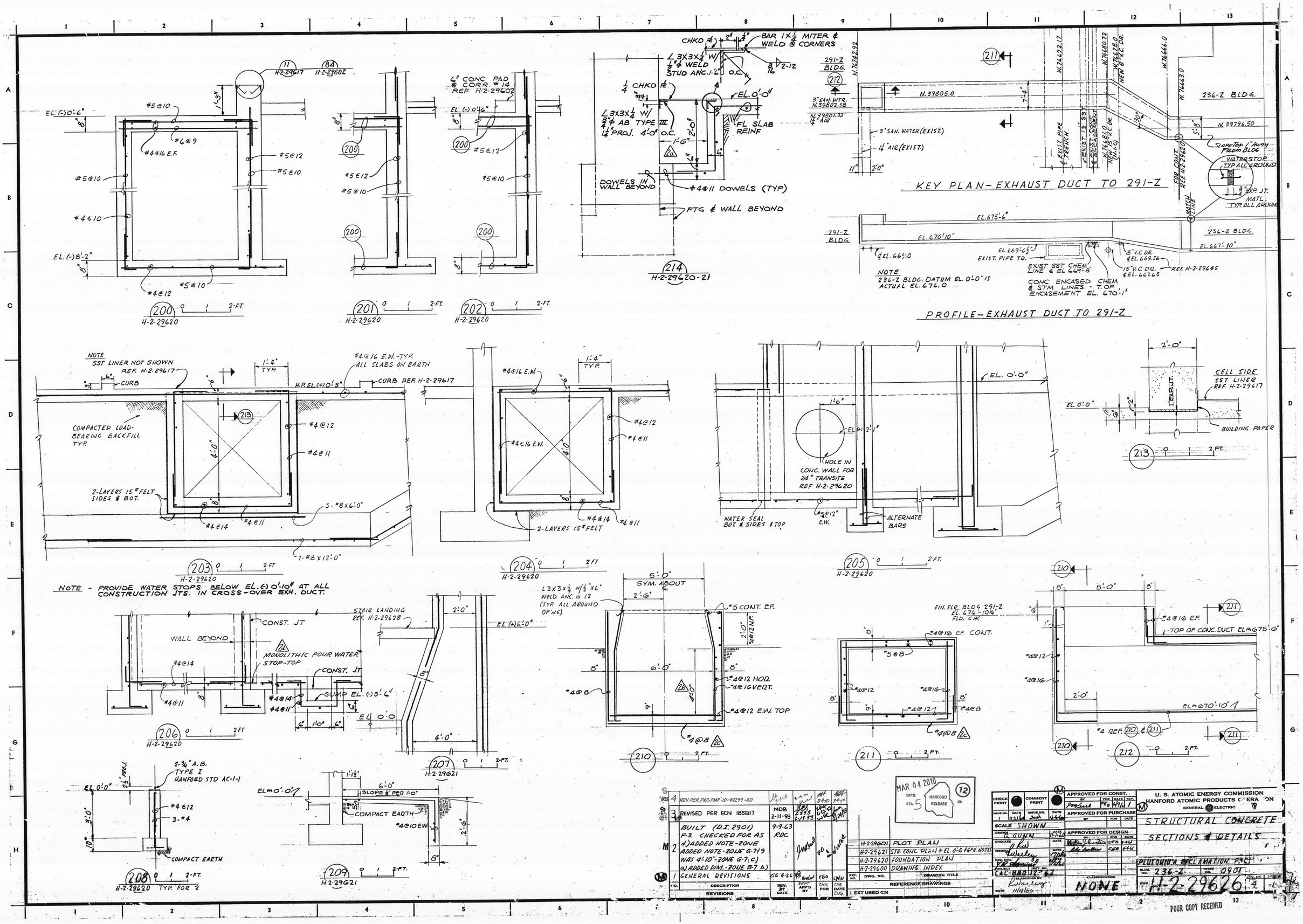

NO.	DESCRIPTION	REV. BY DATE	DRFT APP'D BY	CHK FOR	COG DATE ENG.
4	REV PER PRC-FMP-10-44299-RO	3-3-10	3-4-10	3-4-10	3-4-10
3	REVISED PER ECN 185817	MDB 2-11-93	2293 2-19-93	2-19-93	2-24-93
2	BUILT (D.I. 2901) F-3. CHECKED FOR AS d) ADDED NOTE-ZONE ADDED NOTE-ZONE G-7 & 9 WAS 4'-10"-ZONE G-7 c.) a) ADDED DIM.-ZONE B-7 b.)	9-9-63 RDC		PO	6/29/64
1	GENERAL REVISIONS	GG 4-26		FEO	6/9/61

REVISIONS

REF. NO.	DWG. NO.	DRAWING TITLE
	H-2-29601	PLOT PLAN
	H-2-29621	STR. CONC. PLAN & EL. 0'-0 & GEN. NOTES
	H-2-29620	FOUNDATION PLAN
	H-2-29600	DRAWING INDEX

REFERENCE DRAWINGS

EXT USED ON

MAR 04 2010 DATE: STA: 5 HANFORD RELEASE ID: 12

CHECK PRINT | COMMENT PRINT | APPROVED FOR CONST. | APPROVED FOR PURCHASE | APPROVED FOR DESIGN

SCALE SHOWN

DRAWN G. GUNN 11-1-60

CHECKED

ISSUED

DES. ENG. 11/18/60

PROJECT CAC-880 12-62

CLASSIFICATION NONE

U. S. ATOMIC ENERGY COMMISSION
HANFORD ATOMIC PRODUCTS OPERATION
GENERAL ELECTRIC

STRUCTURAL CONCRETE
SECTIONS & DETAILS

PLUTONIUM RECLAMATION FACT.

BLDG. NO. 236-Z | INDEX NO. 0901

DWG. H-2-29626 | REV. NO. 4 | SHEET 1

POOR COPY RECEIVED

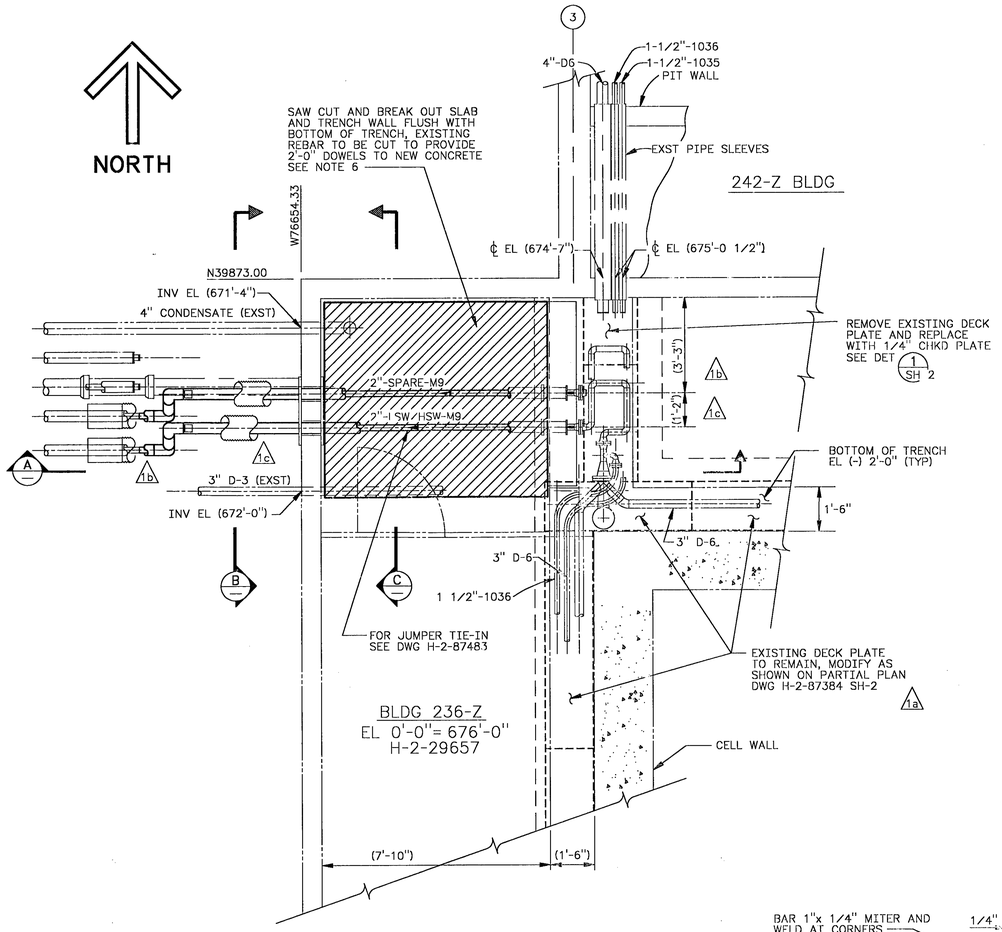

BLDG 236-Z
PARTIAL PLAN - DEMOLITION
SCALE: 1/2"= 1'-0"

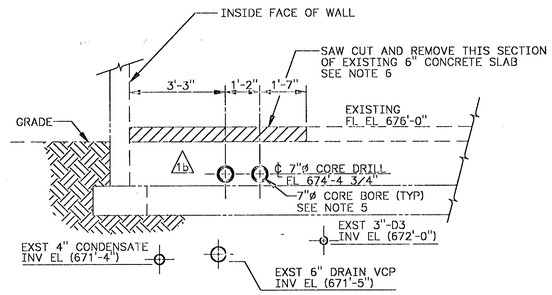

SECTION B
SCALE: 1/2"=1'-0"

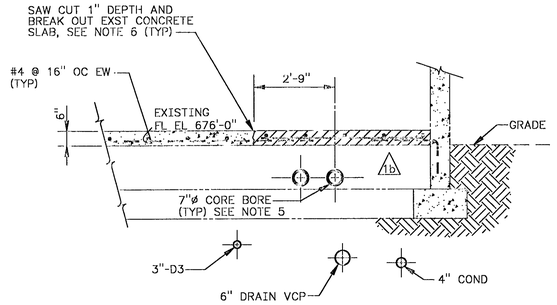

SECTION C
SCALE: 1/2"=1'-0"

NOTES:

1. ALL CONCRETE WORK, THIS DRAWING ONLY, IS SAFETY CLASS 1.
2. CONCRETE SHALL BE PER THE SPECIFICATIONS WITH MINIMUM COMPRESSIVE STRENGHT, f'c= 3000PSI AT 28 DAYS.
3. REINFORCING STEEL SHALL CONFORM TO THE REQUIREMENTS OF ASTM A615, GRADE 60 DEFORMED BARS.
4. STRUCTURAL STEEL SHAPES AND PLATE SHALL CONFORM TO THE REQUIREMENTS OF ASTM A36, Fy=36KSI.
5. CUTTING OF REINFORCING STEEL IS NOT ALLOWED IN EXTERIOR FOUNDATION WALL.
6. WHEN BREAKING OUT CONCRETE FLOOR SLAB AND PIPE TRENCH WALL, PROVIDE 2'-0' STUB OUT OF THE EXISTING #4 BARS, PERPENDICULAR TO THE BREAK LINE. THESE BARS SHALL BE CLEANED OF ALL CONCRETE AND SHALL BE USED AS DOWELS TO THE NEW SLAB AND WALLS.
7. CAST 4"ø ENCASEMENT PIPE IN TRENCH WALL.
8. BACKFILL EXCAVATION AFTER PIPE IS INSTALLED AND TRENCH WALL IS CAST. CAST FLOOR SLAB AFTER BACKFILLING. SEE DWG H-2-87409, SH 1 FOR PIPING.
9. (1d) FIELD LOCATE SUITABLE POSITION IN NEW FLOOR DECKING TO INSTALL NEW VENT LINE. MATERIALS USED FOR NEW VENT SHALL BE THE SAME MATERIALS AS REMOVED FROM EXISTING VENT OR AN APPROVED EQUAL.

LEGEND

LIMITS OF DEMOLITION

NEW CONSTRUCTION

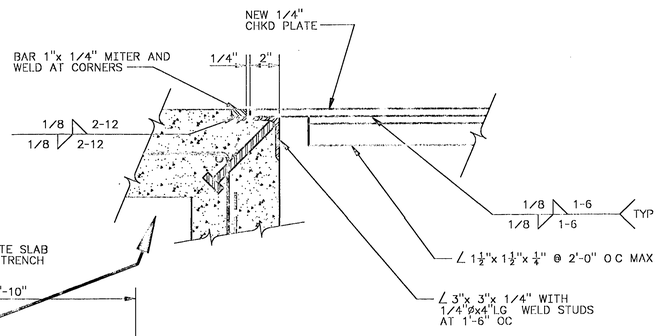

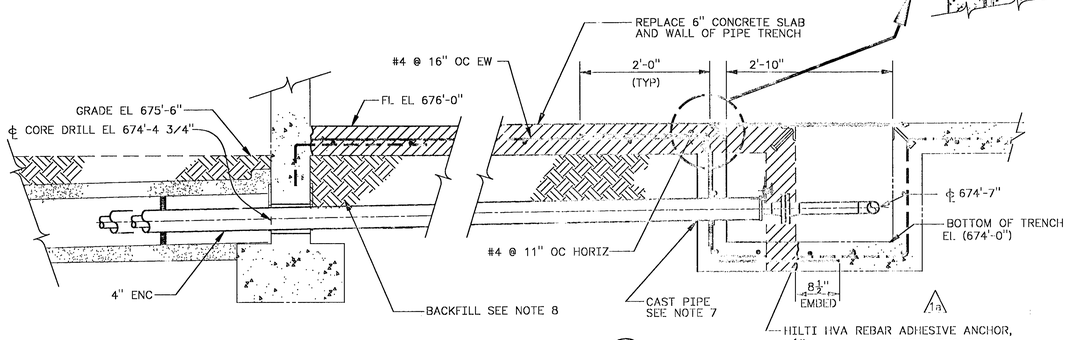

SECTION A
SCALE: 1"= 1'-0"

PHASE II

NUMBER	TITLE
H-2-29657	SERVICE & DRAINAGE PIPING
H-2-29651	OUTSIDE DRAINAGE & PIPING
H-2-29621	STRUCTURAL CONCRETE PLAN
H-2-29600	DRAWING INDEX 236-Z BLDG
H-2-87383	DRAWING LIST

DRAWING TRACEABILITY LIST — NEXT USED ON — REFERENCES

REV NO.	DESCRIPTION	REV BY DATE	KSH APPROVALS
M S 1	AS-BUILT FOR PROJ C-0311 d) ECN C-0311-33 Z D1,2 c) ECN C-0311-32 Z D,E6-8 F3,4, E6-8 b) ECN C-0311-23 Z D4, A5,6 a) ECN C-0311-22 Z D5,6	LDS FEW 7-94	

REVISIONS — CAD FILE B087384A — CAD CODE 2J:IBM:ACD2:12.0:NN

APVD FOR DISPLAYING FOR DATE

APPROVED FOR IMPLEMENTATION BY GL RIPPY FOR WHC DATE 1-27-94

		DATE
DESIGNED	S. SMITH	
DESIGN ENGINEER	A ADAMEK	1-24 1993
CHECKED	NC JASPER	1-24 1994
SAFETY	D LUNDGREN	1-24 1994
COVER	JF MUDGE	1-24 1994
PROJ. ENGINEER	C NIEMUTH	1-23 1993
PROJ ENGINEER	A ADAMEK/FA HARDY	1-23 1993

SAFETY CLASS 1 — FOF 603857

U.S. DEPARTMENT OF ENERGY
RICHLAND FIELD OFFICE
KAISER ENGINEERS HANFORD COMPANY

STRI.
DML AND RECONSTRUCTION
PLAN AND SECTIONS

PROJECT C-0311 PFP LIQUID EFFLUENT TREATMENT FACILITY

SIZE	BLDG NO.	IND.	OA.	DWG NO.	REV NO.
F	2367	0800 0801 0805		H-2-87384	1

SCALE SHOWN — JOB NO. CR1139 — SHEET 1 OF 2

KEHCAD — PLOT SCALE: 1=1

KFH 0350.00 (04/92)
STRIKUD.S: 19920415.0900

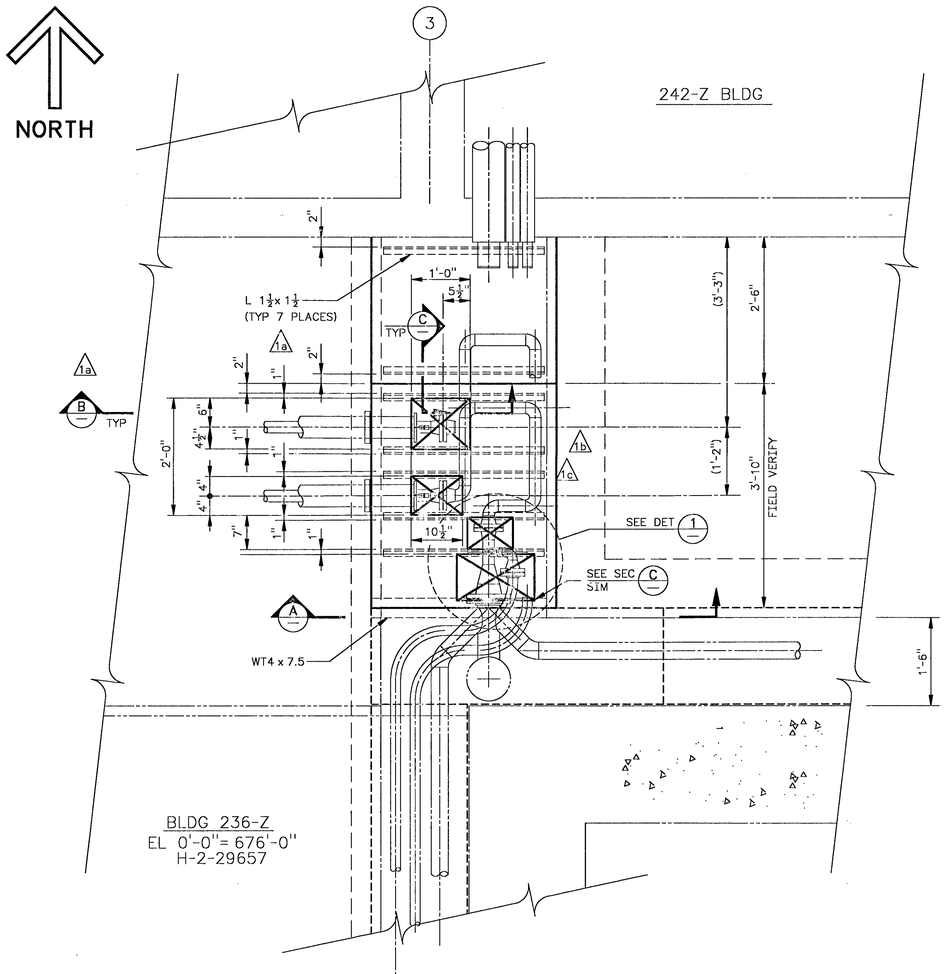

BLDG 236-Z
PARTIAL PLAN
SCALE: 1"= 1'-0"

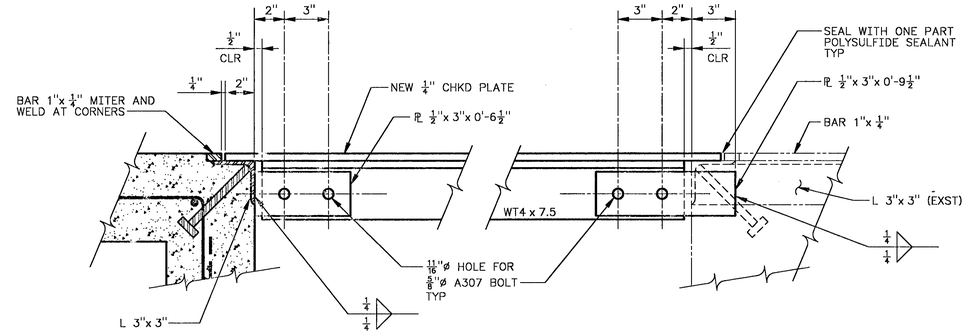

SECTION A
SCALE: 3"=1'-0"

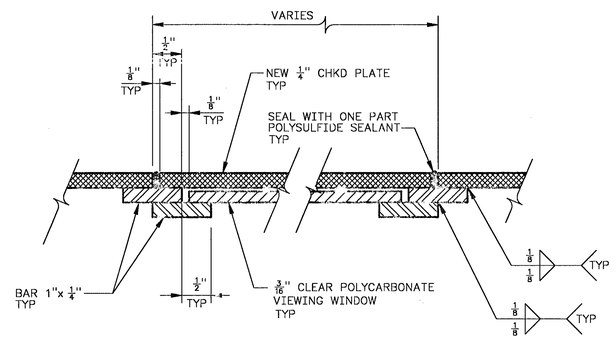

SECTION B
SCALE: NONE

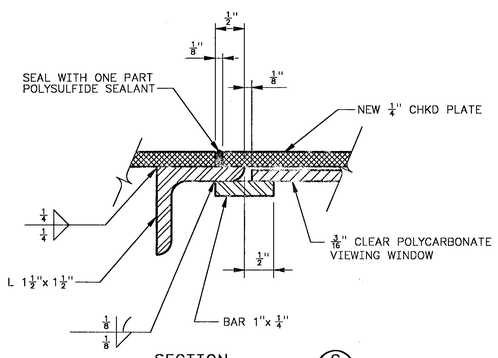

SECTION C
SCALE: NONE

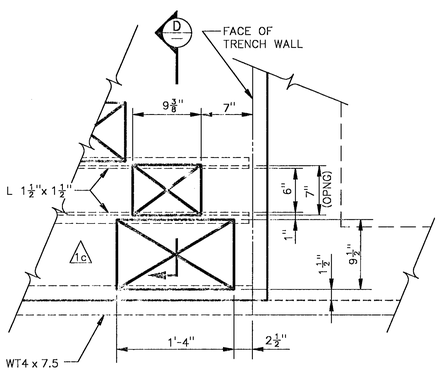

DETAIL 1
SCALE: 1½"= 1'-0"

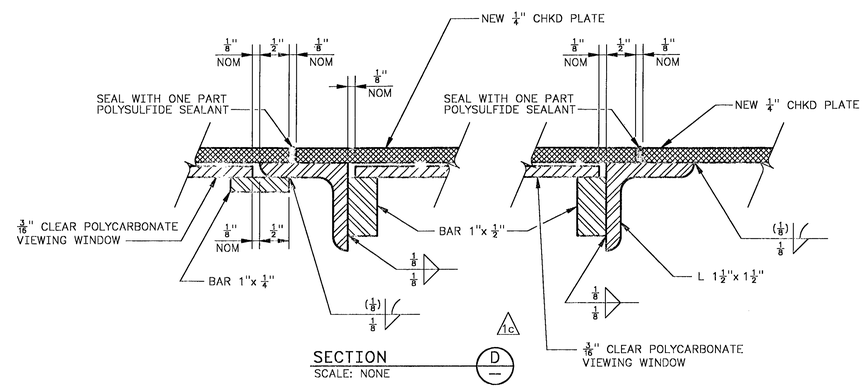

SECTION D
SCALE: NONE

PHASE II

NUMBER	TITLE
H-2-29657	SERVICE & DRAINAGE PIPING
H-2-29651	OUTSIDE DRAINAGE & PIPING
H-2-29621	STRUCTURAL CONCRETE PLAN
H-2-29600	DRAWING INDEX 236-Z BLDG
H-2-87383	DRAWING LIST

DRAWING TRACEABILITY LIST — REFERENCES

NEXT USED ON

REV NO.	DESCRIPTION	REV BY DATE	KEH APPROVALS	APVD FOR IMPL/CNC FOR DATE
S	AS-BUILT FOR PROJ C-031H AB3-6, C-F5-8			
1	c) ECN C-031H-32 Z AB7,8 b) ECN C-031H-23 Z D,E6-8 E8 a) ECN C-031H-22 Z AB7,	LDS EEW 7-94		

REVISIONS

CAD FILE B087384B — CAD CODE 2J:IBM:ACD2:12.0:NN

		DATE
DESIGNED	S. SMITH	
DSGN ENGR	WA ADAMEK	1-24-1994
CHECKED	NC JASPER	1-24-1994
SAFETY	D LUNDGREN	1-24-1994
CNVR	JF MUDGE	1-24-1994
QUAL ENGR	RC NIEMUTH	1-24-1994
LEAD ENGR	WA ADAMEK/FA HARDY	1-25-1994

APPROVED FOR IMPLEMENTATION BY GL RIPPY FOR WHC DATE 1-27-94

SAFETY CLASS 3 — EDT 603857

U.S. DEPARTMENT OF ENERGY
RICHLAND FIELD OFFICE
KAISER ENGINEERS HANFORD COMPANY

STRL
RECONSTRUCTION DECK PLATE
PLAN, SECTIONS & DETAIL

PROJECT C-031H PFP LIQUID EFFLUENT TREATMENT FACILITY

SIZE	BLDG NO.	INDEX NO.	DWG NO.	REV NO.
F	236Z	1000	H-2-87384	1

SCALE SHOWN — JOB NO. CR1139 — SHEET 2 OF 2

PLOT SCALE: 1=1 — KEHCAD

KEH 0350.00 (04/92)
STRTKDIF: 19920415.0000