PRC-SRP-00025
Revision 0

DESIGN REPORT NARRATIVE FOR THE REMOTE EXCAVATOR ARM SYSTEMS , KUR-1782F-RPT-016 R0 (300-296 Soil Remediation Project)

Prepared for the U.S. Department of Energy
Assistant Secretary for Environmental Management

Contractor for the U.S. Department of Energy
under Contract DE-AC06-08RL14788

P.O. Box 1600
Richland, Washington 99352

Approved for Public Release;
Further Dissemination Unlimited

PRC-SRP-00025
Revision 0
EDC#: ECR-16-001241

DESIGN REPORT NARRATIVE FOR THE REMOTE EXCAVATOR ARM SYSTEMS , KUR-1782F-RPT-016 R0 (300-296 Soil Remediation Project)

Document Type: RPT Program/Project: 300-296 Soil Remediation Project

F. M. Blackburn
CH2M HILL Plateau Remediation Company

Date Published
October 2016

Prepared for the U.S. Department of Energy
Assistant Secretary for Environmental Management

Contractor for the U.S. Department of Energy
under Contract DE-AC06-08RL14788

P.O. Box 1600
Richland, Washington 99352

DATE:
Nov 09, 2016
HANFORD RELEASE

APPROVED
By Julia Raymer at 3:33 pm, Nov 08, 2016

Release Approval Date Release Stamp

Approved for Public Release;
Further Dissemination Unlimited

TRADEMARK DISCLAIMER

Reference herein to any specific commercial product, process, or service by tradename, trademark, manufacturer, or otherwise, does not necessarily constitute or imply its endorsement, recommendation, or favoring by the United States Government or any agency thereof or its contractors or subcontractors.

This report has been reproduced from the best available copy.

Printed in the United States of America

Total pages: 55

KUR-1782F-RPT-016

300-296 Soil Remediation Project

Final Design Report Narrative for the Remote Excavator Arm Systems

Revision: 0

Issue Date: June 4, 2015

Prepared for:

AREVA Federal Services LLC
Richland, Washington 99354

Prepared by:

KURION
Isolating Waste from the Environment

Kurion, Inc.
1355 Columbia Park Trail
Richland, Washington 99352

Approved By:

Earl R. Lloyd
Project Manager/Project Engineer

Approved By:

Matt Cole
Lead Engineer

KURION
Isolating Waste from the Environment

KUR-1782F-RPT-016, REV. 0 JUNE 4, 2015

Report Title: **Final Design Report Narrative for the Remote Excavator Arm Systems**

Project Title: **300-296 Soil Remediation Project**

Status: ☐ **In-Process** ☒ **Final**

Contains assumptions and/or inputs which require verification: ☐ **Yes** ☒ **No**

Report History

Revision #	Reason for Revision	Approvals/Date
0	Initial Issue (IFC/IFF)	Originator: Robert R. Heim 6/4/15 Checker: Matt Cole 6-4-15 PM: Earl Lloyd 6/5/15 Other: DAVID MORLEY 6/5/15

Table of Contents

1.0 INTRODUCTION 1

2.0 INTENDED FUNCTION 2
2.1 Through Support Assembly (*REC-1100-000) 5
2.2 Lower REA (*REC-1200-000) 6
2.3 Upper REA (*REC-1300-000) 9

3.0 INSTALLATION LOCATION AND METHODS 11
3.1 Site Preparation 11
3.2 Coring Holes and Mounting Anchor Plate 11
3.3 Installing Through Supports and Dummy Post 14
3.4 Grouting Through Supports 18
3.5 Installing Through Support Ancillary Equipment 22
3.6 Installing Upper/Lower Remote Excavator Arms 24
3.7 Connecting Hoses in Gallery 26
3.8 Installing 4-in. Tool Hangers 33
3.9 Installing Tools 34
3.10 Changing Tools on Remote Excavator Arms 35
3.11 Relocating REA 35

4.0 DESCRIPTION OF FACILITY PREPARATION REQUIRED FOR INSTALLATION 35

5.0 SEQUENCING OF INSTALLATION 36

6.0 DESCRIPTION OF INTERFACES 36
6.1 Hydraulic Power Unit 36
6.2 Camera and Lighting 36
6.3 Offset Tool 36
6.4 Transfer Barrier 36
6.5 REC Cranes 37

7.0 ASSOCIATED EQUIPMENT, ACCESSORIES, SPECIAL TOOLS, AND SPARE PARTS REQUIRED 37
7.1 Equipment Provided by Others 37
7.2 Hose Management Retrieval Hook 37
7.3 Accessories and Spare Parts 38

8.0 EQUIPMENT DISPOSITION 38

9.0 RANGE OF MOTION 38

10.0 REFERENCES 43

11.0 COMPRESSIVE STRENGTH REFERENCE 44

12.0 INFORMATION FROM JOHN DEERE 45
12.1 John Deere 35G 45
12.2 John Deere 50G 46

Figures

Figure 1 – Overall Remote Excavator Arm Equipment Installed into B-Cell 1
Figure 2 – Through Support Assembly Details 5
Figure 3 – Lower Remote Excavator Arm in Transport Position (shown without hoses) 6
Figure 4 – Lower REA Hose Routing, Post to Knuckle 7
Figure 5 - Hose Routing and Configuration at the Knuckle and Arm 8
Figure 6 – Upper Remote Excavator Arm (shown without hoses) 9
Figure 7 – Upper REA Hose Bundle Routing, Post to Knuckle 10
Figure 8 - Upper REA Hose Routing, Knuckle to Boom (note: split bundles) 10
Figure 9 – Remote Excavator Arm Through Support Install Locations 11
Figure 10 – General Location of Through Support Anchor Plate 12
Figure 11 – Detailed Core Location Relative to Radiochemical Engineering Complex Features (Southwest Site shown) (in Inches) 13
Figure 12 – Through Support Install with Support Ski 14
Figure 13 – Through Support Initial Mounting 15
Figure 14 – Dummy Post Mounted on Through Supports 16
Figure 15 – Cross Section of Through Support 17
Figure 16 – Jacking Nut Details 18
Figure 17 – Through Support Air Seal 19
Figure 18 – Grout Shear Rings (normally not shown for clarity) 20
Figure 19 – Grouted Void Space 21
Figure 20 – Penetration Cover 22
Figure 21 – Shield Door Install 23
Figure 22 – Remote Excavator Arm Initial Alignment Features (Simplified Vew) 24
Figure 23 – Lower Remote Excavator Arm in Installed Position (Hoses not Connected) 25
Figure 24 – Hooking Hose Management with Tool 26
Figure 25 – Pulling Hose Management Tube into Gallery 27
Figure 26 – Hose Tube Locked Against Anchor Plate 28
Figure 27 – Hose Management Tube End Cap Removal 29
Figure 28 – Hydraulic Hose Removal from Tube 30
Figure 29 – Hose Bundle Shuttle and Back Stop 31
Figure 30 – Groove in Hose Shuttle (Left) and Installation of Stop Plate (Right) 31
Figure 31 – No-Leak, Self-Sealing Hydraulic Connectors 32
Figure 32 – Shield Door in Locked Position 32
Figure 33 – 4-in. Tool Holder Installed in Penetration 33
Figure 34 – Tool and Hanger Installed into B-Cell 34
Figure 35 – Tool Change Steps 35
Figure 36 – Hose Management Hook Tool 37
Figure 37 – Remote Excavator Arm Range of Motion 38
Figure 38 – PowerTilt® Bucket Reaching Underneath Foundation 39
Figure 39 – Lower Remote Excavator Arm Range of Motion with PowerTilt® 39
Figure 40 – PowerGrip® Bucket with Beam Showing Extended Reach 40
Figure 41 – Full Range of Motion Fully Covering Primary and Secondary Soil 41
Figure 42 – Elevation View of Limited Operation Zone (in) 41
Figure 43 – Simplified View of Reaction Loads Generated During Pivoting 42
Figure 44 - John Deere 35G Boom Pivot Pin Location 45
Figure 45 - John Deere 35G Lift Capacity Chart 45
Figure 46 - John Deere 50G Boom Pivot Pin Location 46
Figure 47 - John Deere 50G Lift Capacity Chart 46

Tables

Table 1 - Tool Weights 3
Table 2 - Lift Capacities of Lower REA (lbs) with OilQuick Coupler and No Bucket 4
Table 3 - Lift Capacities of Upper REA (lbs) with OilQuick Coupler and No Bucket 4

Acronym List

Acronym	*Definition*
HPU	Hydraulic Power Unit
REA	Remote Excavator Arm
REC	Radiochemical Engineering Complex
ROM	Range of Motion

1.0 Introduction

The Remote Excavator Arm (REA) System is an equipment set (Figure 1) designed to be remotely installed into the 324 Building Radiochemical Engineering Complex (REC) to remove debris, flooring, and soil from B-Cell. At the center of the design are commercial excavator arms from John Deere®[1] (35G and 50G). These arms operate in a typical excavator fashion, but are mounted to a steel post mounted to the side of the cell wall. The REAs are custom equipment that are designed for the 324 Facility, and are intended to make remote mounting and hose connection possible with support from the gallery. Inside the cell are five excavator tools that enable a variety of options. Most of these are commercial excavator tools such as shears and hammers, although some are custom for specific Project 324 tasks. Each tool and the excavators are supplied with a commercial remote tool change mechanism (OilQuick®[2]), which allows mechanical and hose connection to tools remotely.

There are two styles of REAs: Upper and Lower. The Lower REA consists of a John Deere 35G mounted to a tall vertical post. This post mounts to the Through Supports (discussed below) and positions the REAs near the floor of the cell, about 10 feet below the mounting. These REAs are used for a variety of activities but the primary activities are in reaching underneath and below the foundation of the cell to remove contaminated soil.

The Upper REA consists of a John Deere 50G excavator arm mounted on a short post. It fits on the same through tube assembly as the Lower REA and their mounting locations are interchangeable. The Upper REA's primary purpose is to assist in the debris removal from the floor of the B-Cell and to handle waste bins in the B-Cell.

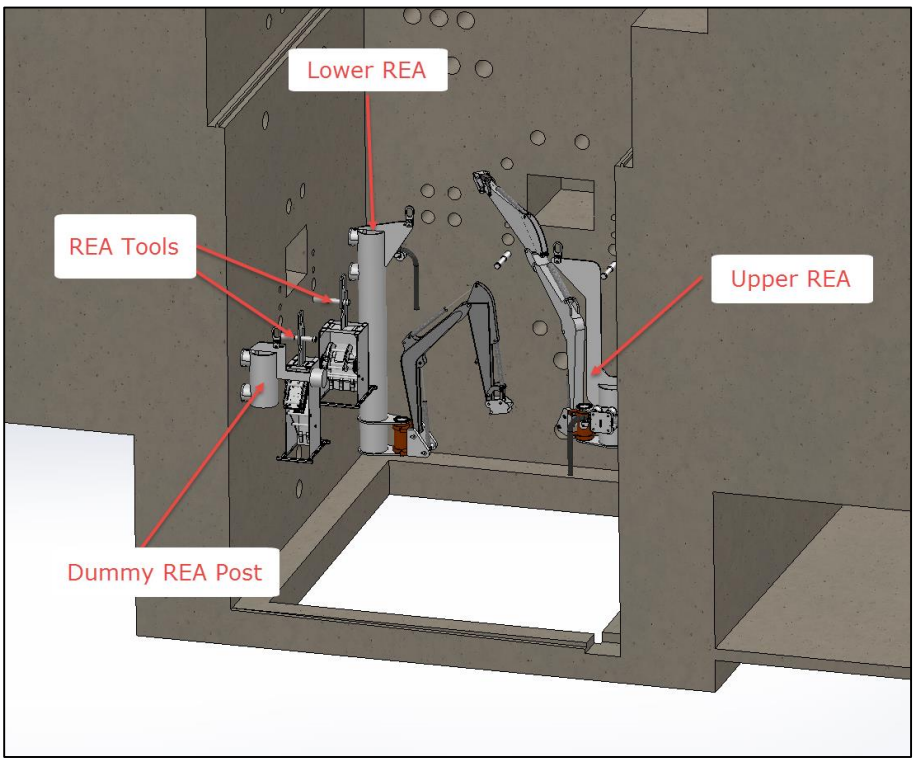

Figure 1 – Overall Remote Excavator Arm Equipment Installed into B-Cell

[1] John Deere is a registered trademark of Deere & Company, Moline, Illinois.
[2] OilQuick is a registered trademark of OilQuick AB Corporation, Hudiksvall, Sweden.

Before mounting, four sets of core holes (three holes per set) are bored in each corner of the REC. Into each of these core holes, a Through Support assembly is mounted which consists of two solid tubes and one hose management penetration that extends into the REC. These include mounting bolts for the REA and the connection features for the REA hose management system. The two solid tubes are permanently grouted into the REC wall and fit either an Upper or Lower REA.

The following equipment for the REA is included in this report. The full list of equipment, with Kurion part numbers, is listed below. For brevity, only the last part of the formal drawing or part number is called out. All formal numbers are preceded by KUR-1782F-DWG-M-*:

- Through Support–*REC-1100-000
- Lower REA–*REC-1200-000
- Upper REA–*REC-1300-000

Additionally, there is some discussion of support equipment and tools for the REA in this report. However, these items are covered in more detail in KUR-1782F-RPT-037, *Final Design Report Narrative for Miscellaneous Mechanical Equipment*.

- 4-in. Tool Hanger Weldment–*REC-1400-000
- Long Reach Bucket and Tool Holder Assembly–*REC-1410-000
- PowerGrip®[3] Bucket and Tool Holder Assembly–*REC-1420-000
- Shear and Tool Holder Assembly–*REC-1430-000
- Hammer and Tool Holder Assembly–*REC-1440-000
- REA Bin Lifting Tool Assembly–*REC-4390-000
- Lower REA Cart Assembly–*REC-1290-000
- Upper REA Cart Assembly–*REC-1390-000
- Dummy Post Assembly–*REC-1460-000

2.0 Intended Function

Although up to four REAs can be installed into the REC, it is intended that one each (Upper and Lower) REA is installed. The following is a list of functions for the REA System within the REC in roughly chronological order:

- Size reduction of loose debris
  - Requires Upper REA, hammer, shear
- Grout layer rubblization on floor of B-Cell
  - Requires Upper REA, hammer
- Size reduction of fixed debris in B-Cell
  - Requires Upper REA, hammer, shear
- Removal of debris and grout waste from B-Cell
  - Requires Upper REA, PowerGrip® bucket
- Positioning of saw in B-Cell
  - Requires Upper REA
- Rubblization of floor (backup to saw)
  - Requires Upper REA, hammer, shear, PowerGrip bucket
- Size reduction of saw frame (after sawing)
  - Requires Upper REA, shear
- Removal, mixing, and loading of soil and grout

[3] PowerGrip is a registered trademark of the Helac Corporation, Enumclaw, Washington.

- Requires Lower REA, PowerGrip bucket, long reach bucket
- Moving waste bins within B-Cell
- Requires Upper REA, REA bin lifting tool

To perform these functions, the REA must be capable of deploying the tools. Table 1 provides the weights of the individual tools deployed by the REAs.

Table 1 - Tool Weights

Drawing Number	Description	Weight (lbs)	Comment
*REC-1411-000	Long Reach Bucket	550	2.3 cu ft capacity
*REC-1421-000	PowerGrip Bucket	520	3.7 cu ft capacity
*REC-1431-000	Shear	1431	
*REC-1441-000	Hammer	682	
*REC-4300-000	Waste Bin Lifting Tool	287	Max bin weight 2200lbs

Tables 2 and 3 show the lifting capacity for the Upper and Lower REAs. These tables were based on the lift capacities of the John Deere 35G and 50G excavators. The tables were modified to reflect load point heights based on the elevation of the Airlock floor, horizontal distance from the center of the boom swing, and lifting capacities based on no bucket and the OilQuick connector.

The load point heights (rounded to the nearest foot) shown in the tables below are calculated by:

LPH = TVH - PH + FE
Where:
LPH = Load Point Height
TVH = Table Value for the load point height (see Section 12.0)
PH = Distance from the ground to the boom pivot pin (45” for the 50G and 39” for the 35G)
FE = Distance from the Airlock floor to the boom pivot pin (Upper REA: +21.5”, Lower REA: -92.5”)

The horizontal lifting distances from the center of rotation are calculated by:

HLD = TVD - CD
Where:
HLD = Horizontal lifting distance
TVD = Table Value for the horizontal distance (see Section 12.0)
CD = Distance between the centers of the chassis swing and boom swing axes (36” for the 50G, 30” for the 35G)

The lift capacities are calculated by:

LC = TVLC + BW + JDC - WOQ
Where:
LC = Lift capacity
TVLC = Table value for the lift capacity
BW = Bucket weight considered in the table (252 lbs for the 50G and 176 lbs for the 35G)
JDC = Weight of the John Deere coupler removed from the machine (39lbs)
WOC = Weight of the OilQuick coupler (71 lbs)

Table 2 - Lift Capacities of Lower REA (lbs) with OilQuick Coupler and No Bucket

Load Point Height from Airlock Floor (feet)	Horizontal Lifting Distance (feet) From Boom Swing Axis		
	2.5	7.5	12.5
-6		2401	1915
-11	1956	3451	2120
-16	5186	3293	

Table 3 - Lift Capacities of Upper REA (lbs) with OilQuick Coupler and No Bucket

Load Point Height from Airlock Floor (feet)	Horizontal Lifting Distance (feet) From Boom Swing Axis		
	2	7	12
8			2500
3		4429	2906
-2		5676	3280
-7	5799	5068	

2.1 Through Support Assembly (*REC-1100-000)

The Through Support assembly structures are permanently mounted into the REC wall, and provide B-Cell support for the REAs and external access for hose connections and bolting for the operators in the gallery. The Through Support tubes are equipped with ribs to facilitate the grout connection with the B-Cell wall. They are shown in Figure 2 (note that other figures in this report showing the Through Support tubes, the grout ribs have been omitted for clarity).

The Through Support assembly, as shown in Figure 2, is composed of the following items:

- Anchor plate
- Upper Through Support tube
- Lower Through Support tube
- Bolt assemblies
- Shield door
- Penetration cover

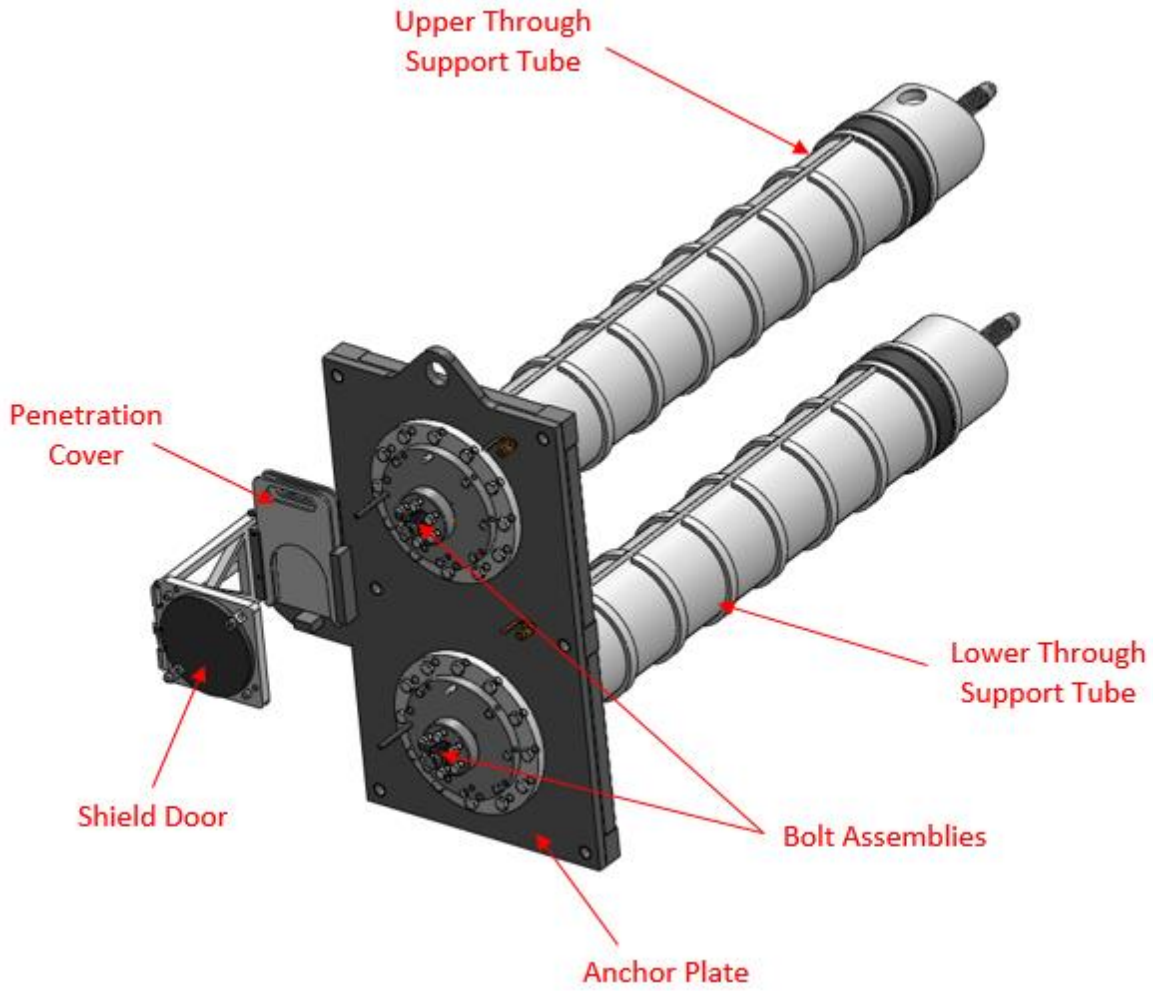

Figure 2 – Through Support Assembly Details

2.2 Lower REA (*REC-1200-000)

The Lower REA (Figure 3) is composed of a John Deere 35G excavator arm mounted on a vertical post. The REA functions like any commercial excavator, although the typical tool connection plate has been replaced by a commercial tool change plate made by OilQuick.

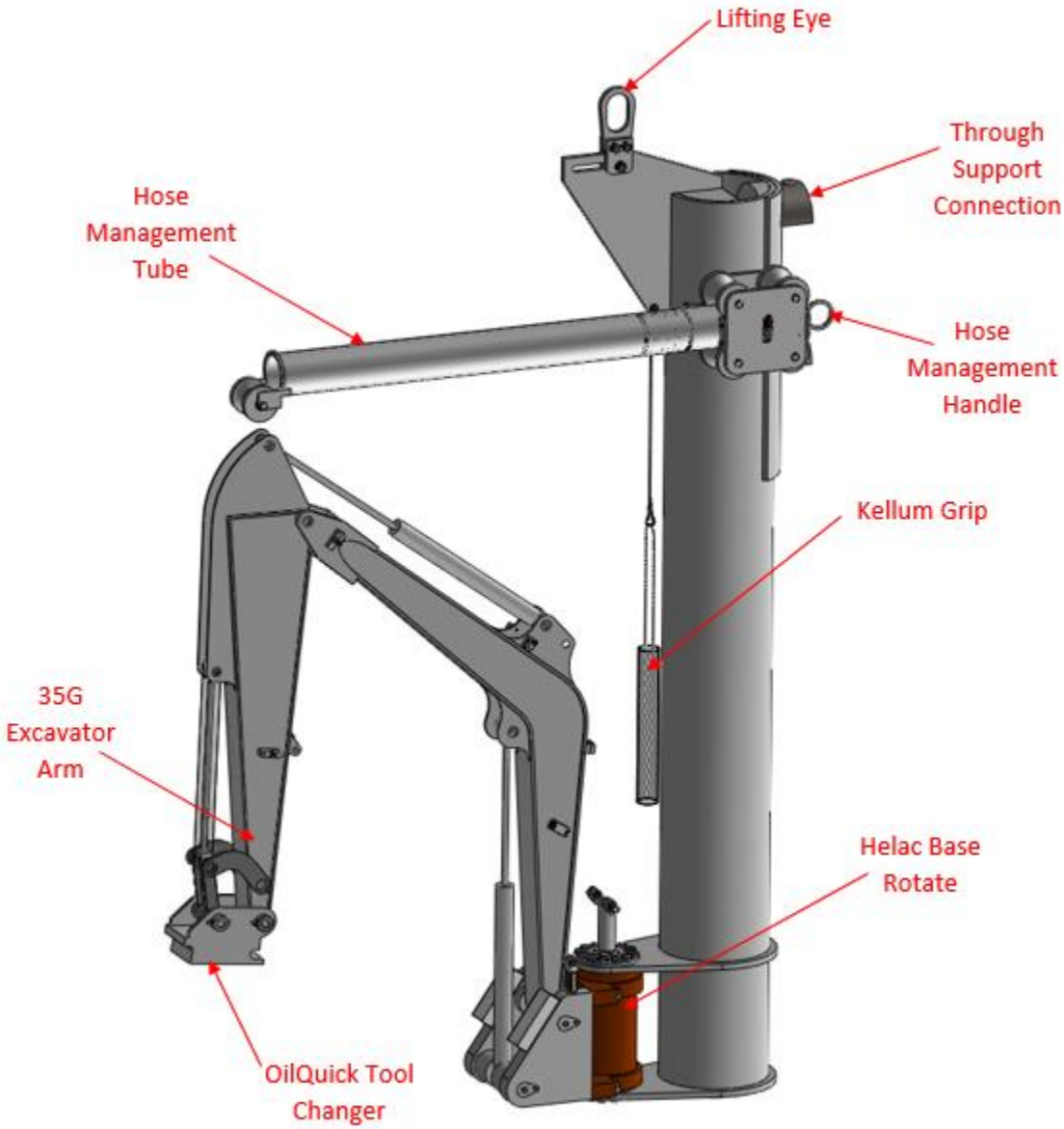

Figure 3 – Lower Remote Excavator Arm in Transport Position (shown without hoses)

The base rotate is a direct drive rotary hydraulic actuator made by Helac. This actuator has a full rotation of 180° and internal hard stops.

The upper portion of the post includes two threaded holes and location features which allow the REA to be connected to the Through Support assembly. This portion of the REA also includes the hose

management tube, a rigid tube filled with hydraulic hoses, which rolls on a set of rollers allowing the hoses to be retracted for transport and extended for connection in the gallery.

The final hose routing and connection to the Lower REA was finalized during the Advanced Equipment Development (AED) Evaluations. Figure 4 shows the hose routing from the hose management system down to a clamping location on a rotating support mounted on top of the Helac mounting plate. A cable system, connected to the bottom of the lift plate, holds the excess hose out of the way during operations. Connection of the cable system to the support cable is accomplished with a Kellum Grip. Figure 5 depicts typical hose routing and clamping locations on the knuckle and out onto the arm.

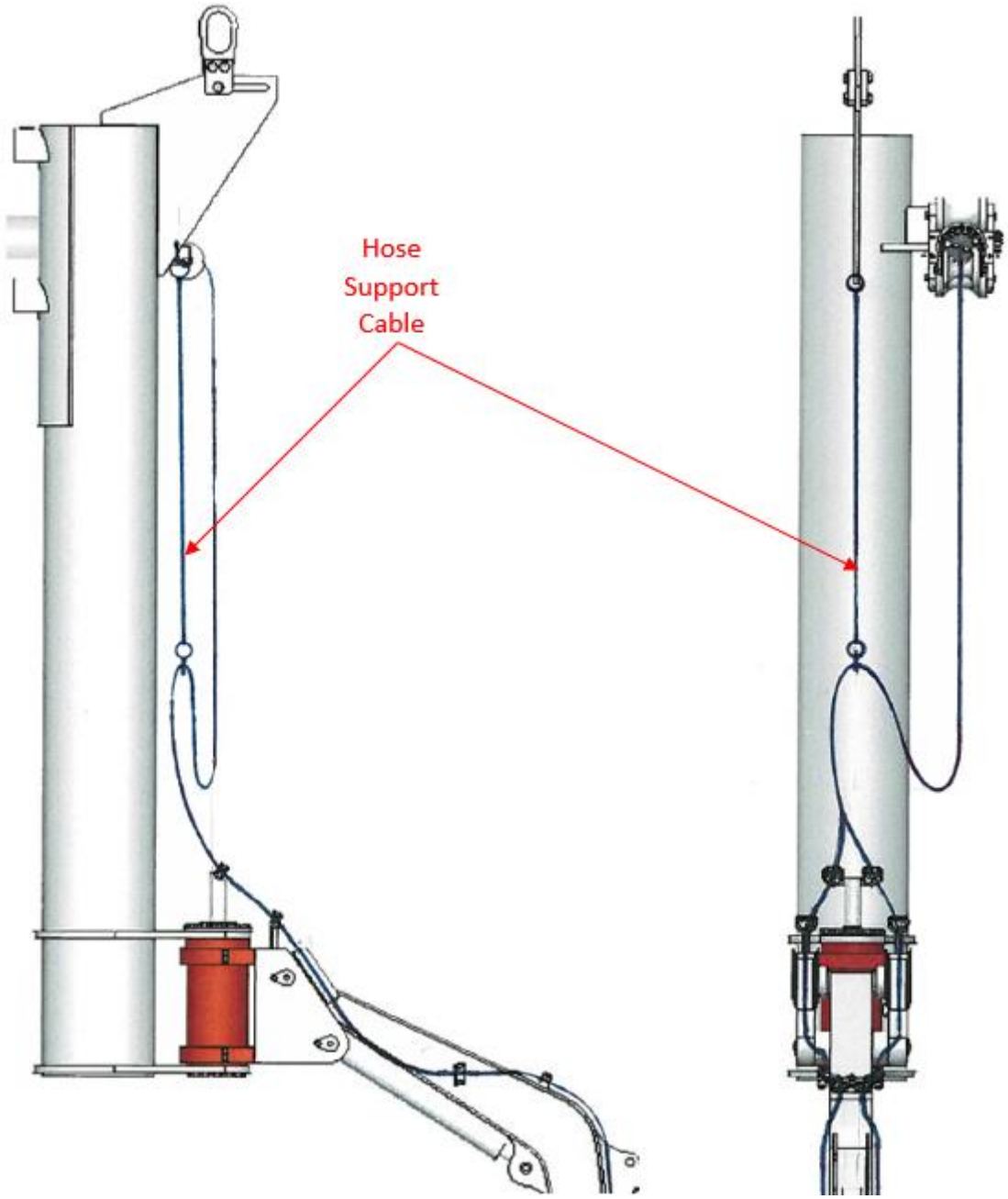

Figure 4 – Lower REA Hose Routing, Post to Knuckle

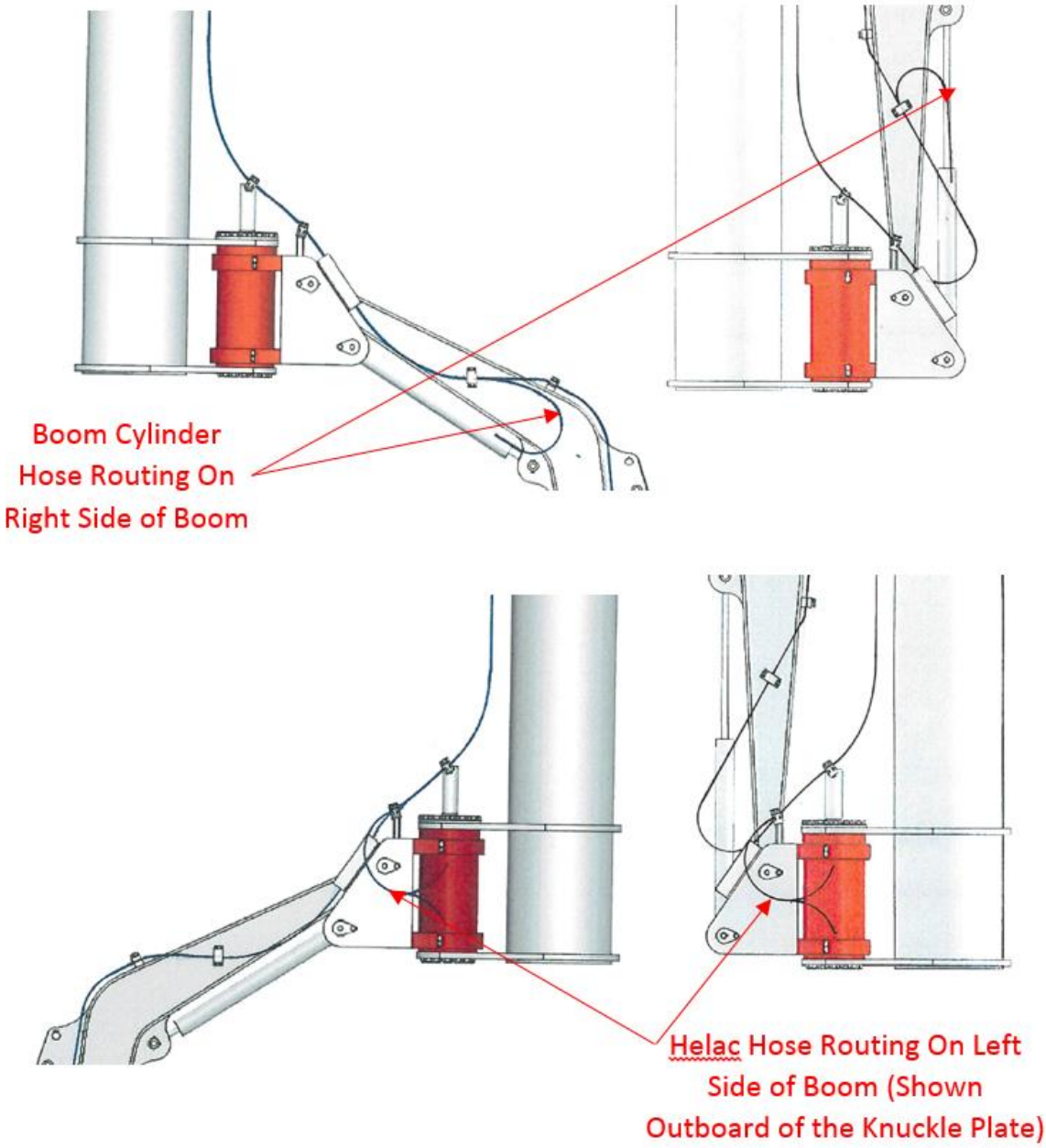

Figure 5 - Hose Routing and Configuration at the Knuckle and Arm

2.3 Upper REA (*REC-1300-000)

The Upper REA (Figure 6) resembles the Lower REA except that the post is much shorter and it uses a John Deer 50G excavator arm instead of the 35G. As seen in Figure 6, the arm is mounted closer to the Through Supports.

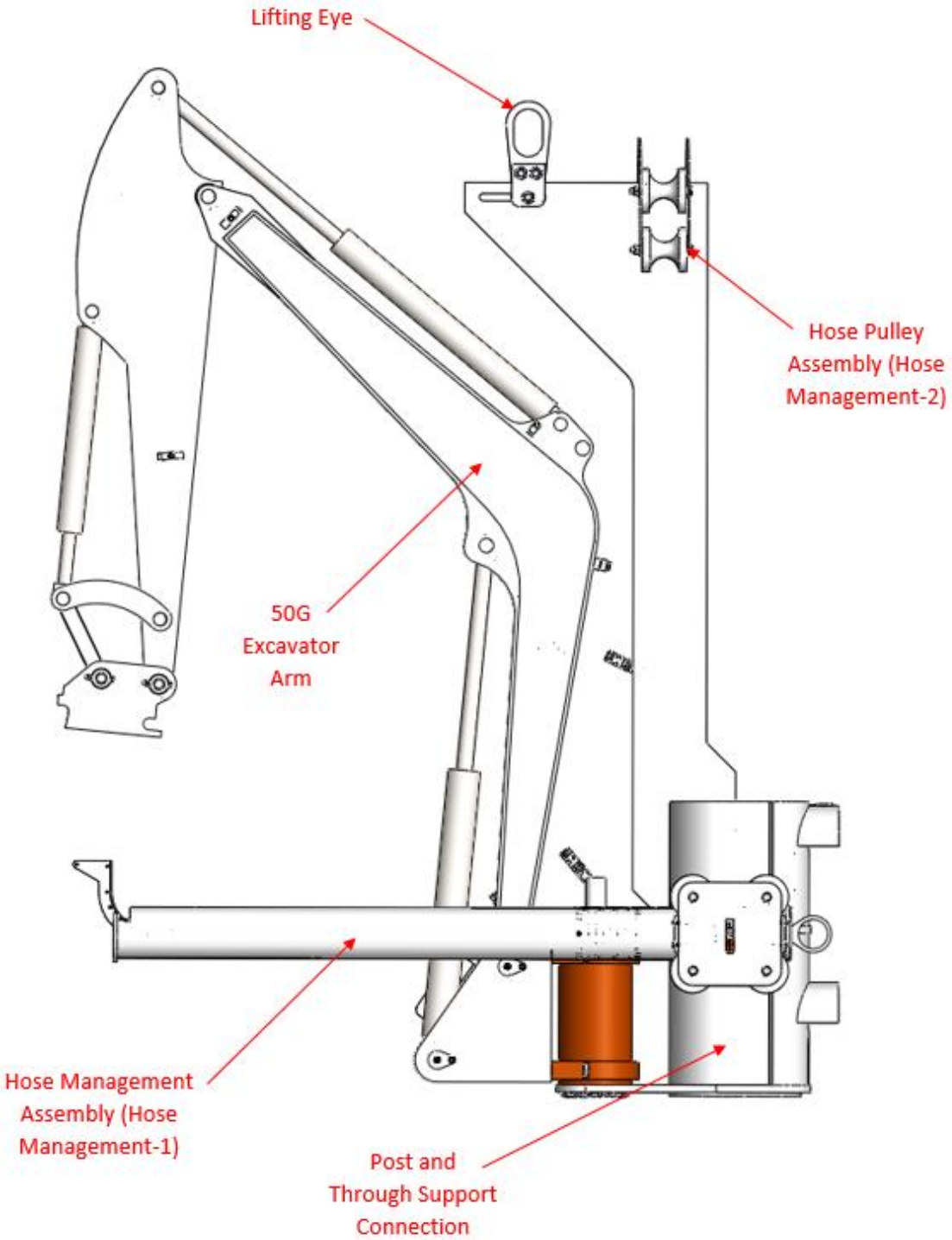

Figure 6 – Upper Remote Excavator Arm (shown without hoses)

To accommodate the extra length of hose required for the REA in the transport position, the hose management system directs the hose bundle up and over the lifting plate and then down the other side (Figure 7). A weight attached to the hose bundle maybe required to ensure that the extra slack is pulled over the top of the plate allowing the extra length to be controlled as a loop above the Helac actuator and out of the way of the moving parts of the equipment. All hoses are routed along the right side of the boom to eliminate congestion in the hose management area. The hose routing from the knuckle plates to the Helac and the Boom Cylinder is similar to the lower REA (Figure 5) though all hoses are routed along the right side of the boom.

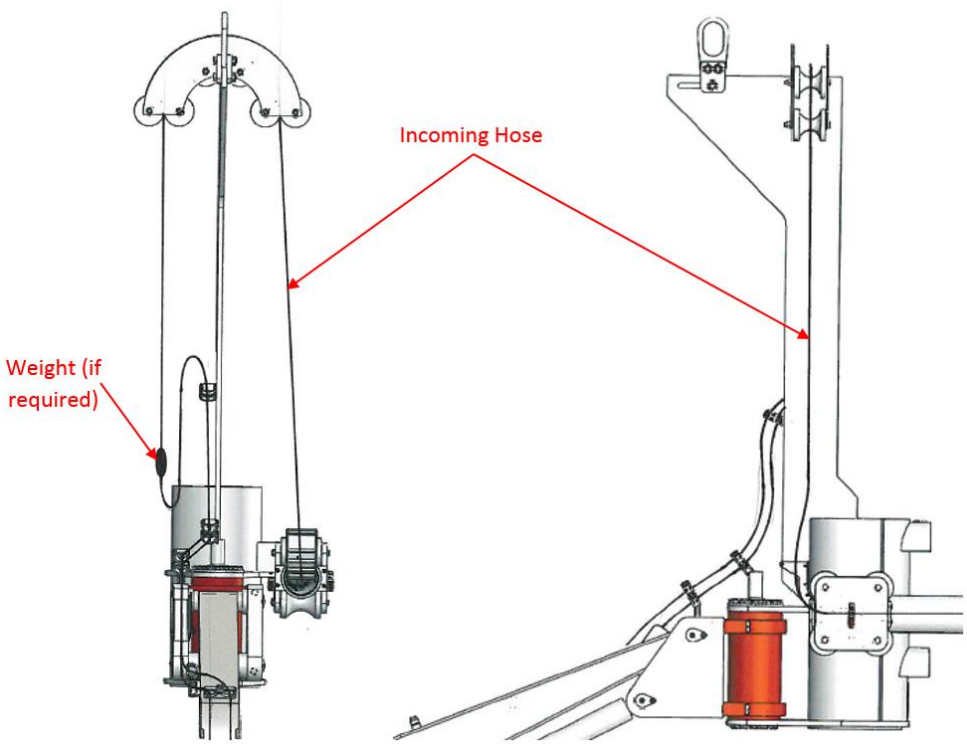

Figure 7 – Upper REA Hose Bundle Routing, Post to Knuckle

Figure 8 shows that the hose bundle splits into 2 bundles (similar to the Lower REA). The split bundles provide more favorable bend radii. Both bundles are routed on the right side of the boom.

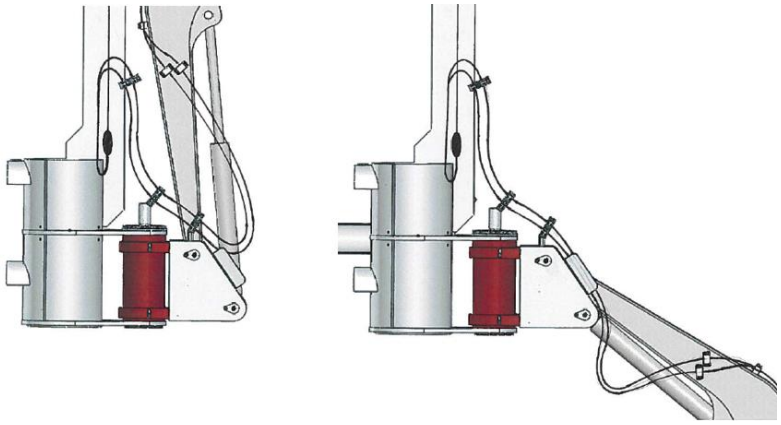

Figure 8 - Upper REA Hose Routing, Knuckle to Boom (note: split bundles)

3.0 Installation Location and Methods

The installation of the REA requires a number of steps that are outlined and explained in the following sections.

3.1 Site Preparation

The initial step of installing the REA is the site preparation of the north and south outer walls of B-Cell. Site preparation requires removing the interferences, primarily wall obstructions, to perform core drilling (Figure 9).

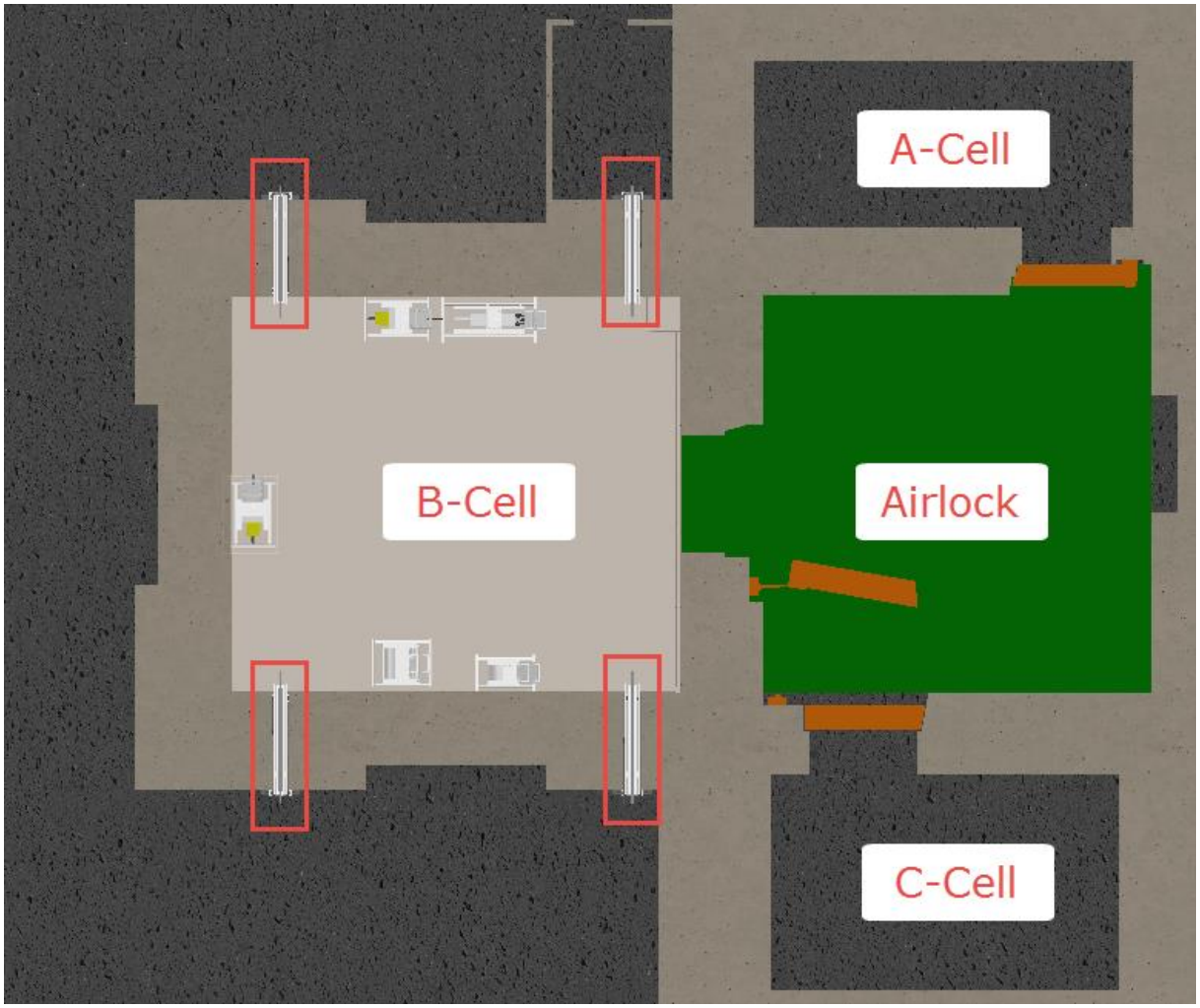

Figure 9 – Remote Excavator Arm Through Support Install Locations

3.2 Coring Holes and Mounting Anchor Plate

After the walls are cleared, holes will be cored through the wall and the Through Support anchor plate installed (Figure 10). The installed Through Support anchor plate will be mounted in four locations with

two 12-in. core bores and one offset 10-in. core bore. Note that the 12" bores maybe increased in size and roughened to up to 14" for the majority of their length. However, the section that interfaces with the sealing ring should be a smooth 12" bore. There is also an independent structural frame that mounts to the Through Support anchor plate, the details of this item are covered in the structural design package including:

- KUR-1782F-DWG-S015, *Structural North Side of REC Structural Modifications Plan*
- KUR-1782F-DWG-S016, *Structural North Side of REC Structural Modifications Elevation*
- KUR-1782F-DWG-S017, *Structural South Side of REC Structural Modifications*
- KUR-1782F-DWG-S020, *Structural REA Anchorage Bracket Sections and Details*
- The calculation is KUR-1782F-CALC-C012, *REA Anchorage Bracket Structural Design*

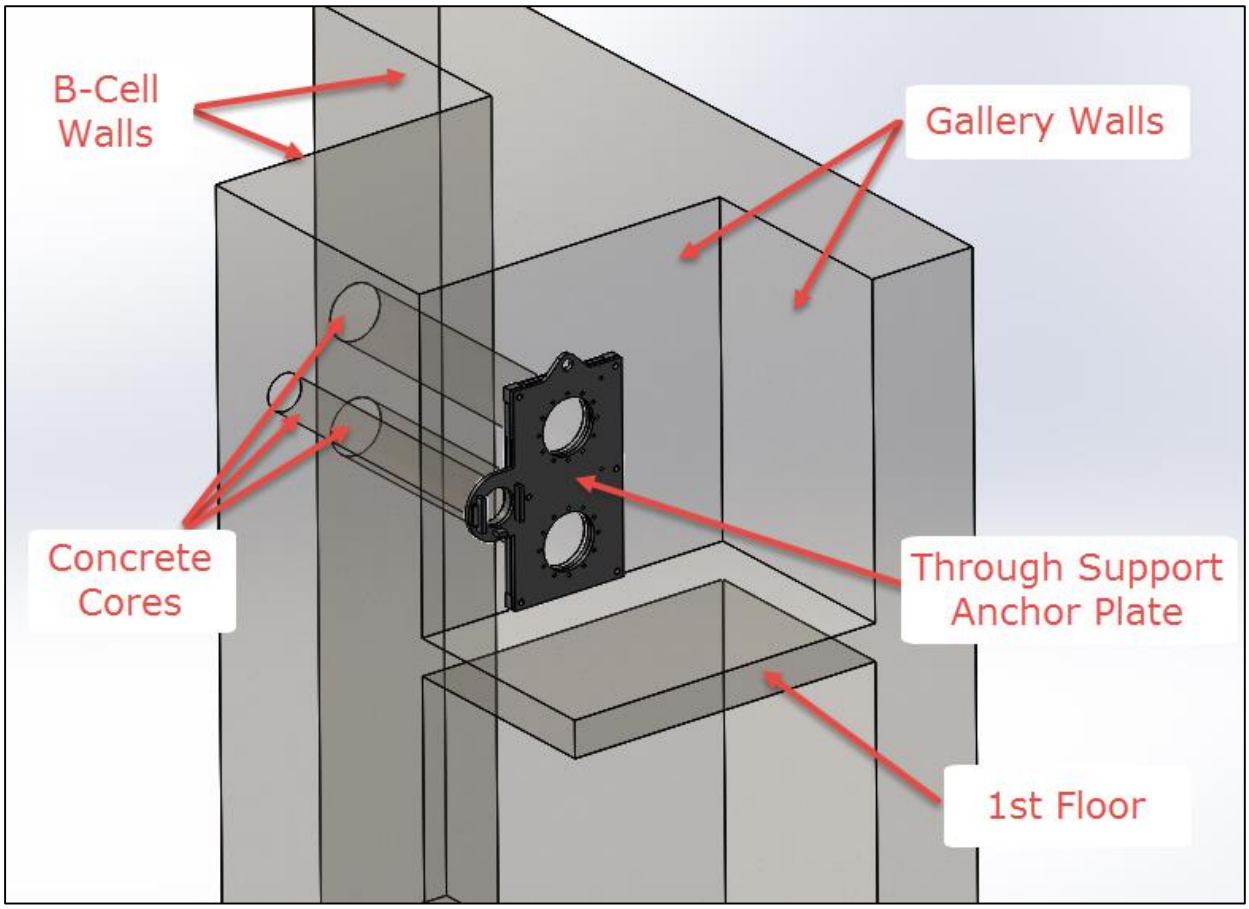

Figure 10 – General Location of Through Support Anchor Plate

Formal dimensions are listed in drawing *REC-1110-000; however, for information the mounting location is as shown in Figure 11. The anchor plate is supplied with 6 bolts in which a set of Hilti-style fasteners can be installed. These fasteners are only temporary and can be selected by the operations team based on convenience. Their purpose is to hold the anchor plate in place until the annular space is grouted. After the grout is set the anchor bolts must be removed as the structural analysis assumes only one load path and these would create a potential secondary path.

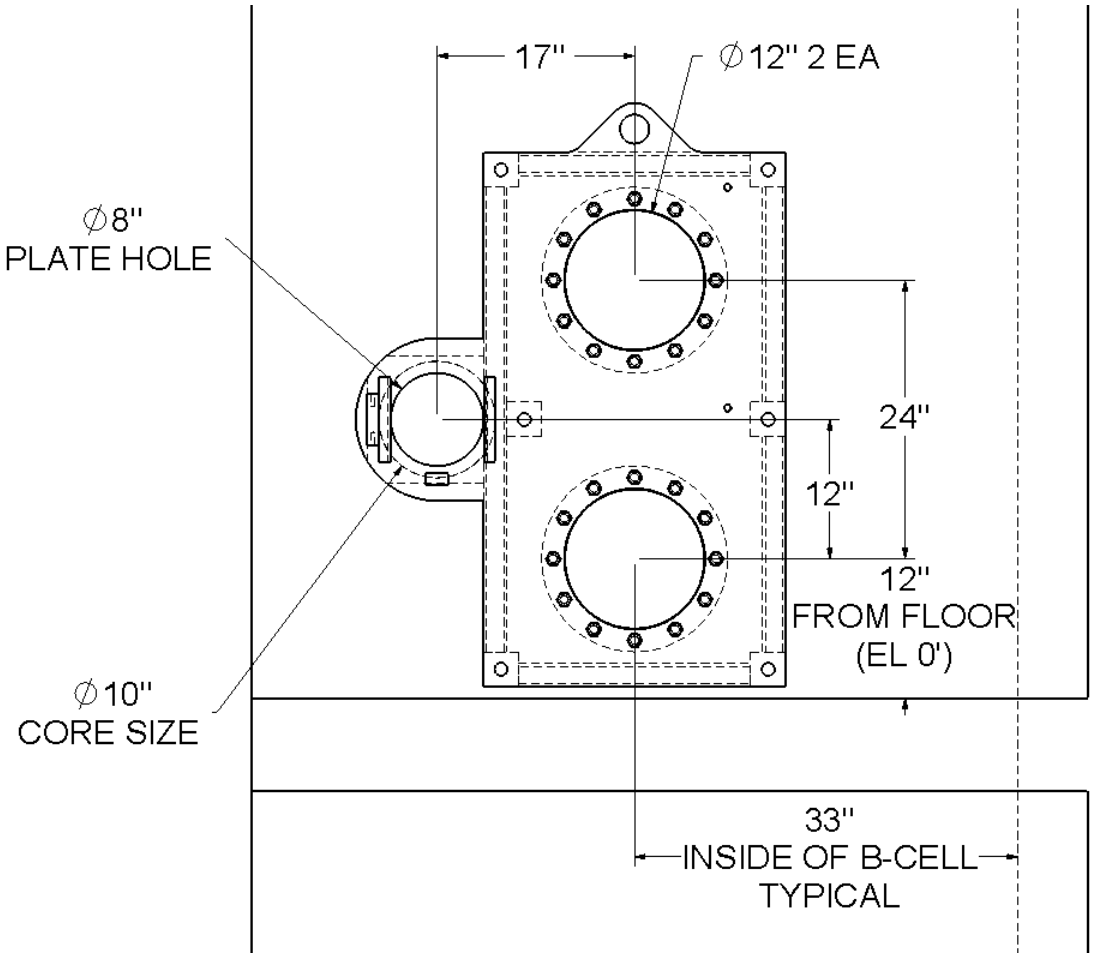

Figure 11 – Detailed Core Location Relative to Radiochemical Engineering Complex Features (Southwest Site shown) (in Inches)

3.3 Installing Through Supports and Dummy Post

After the anchor plate is secured to the wall and the three holes have been cored, each of the two Through Supports can be installed. These are pushed into the core holes and a small "ski" on the bottom of the tube can be used to support the tube on the bottom of the core surface (Figure 12).

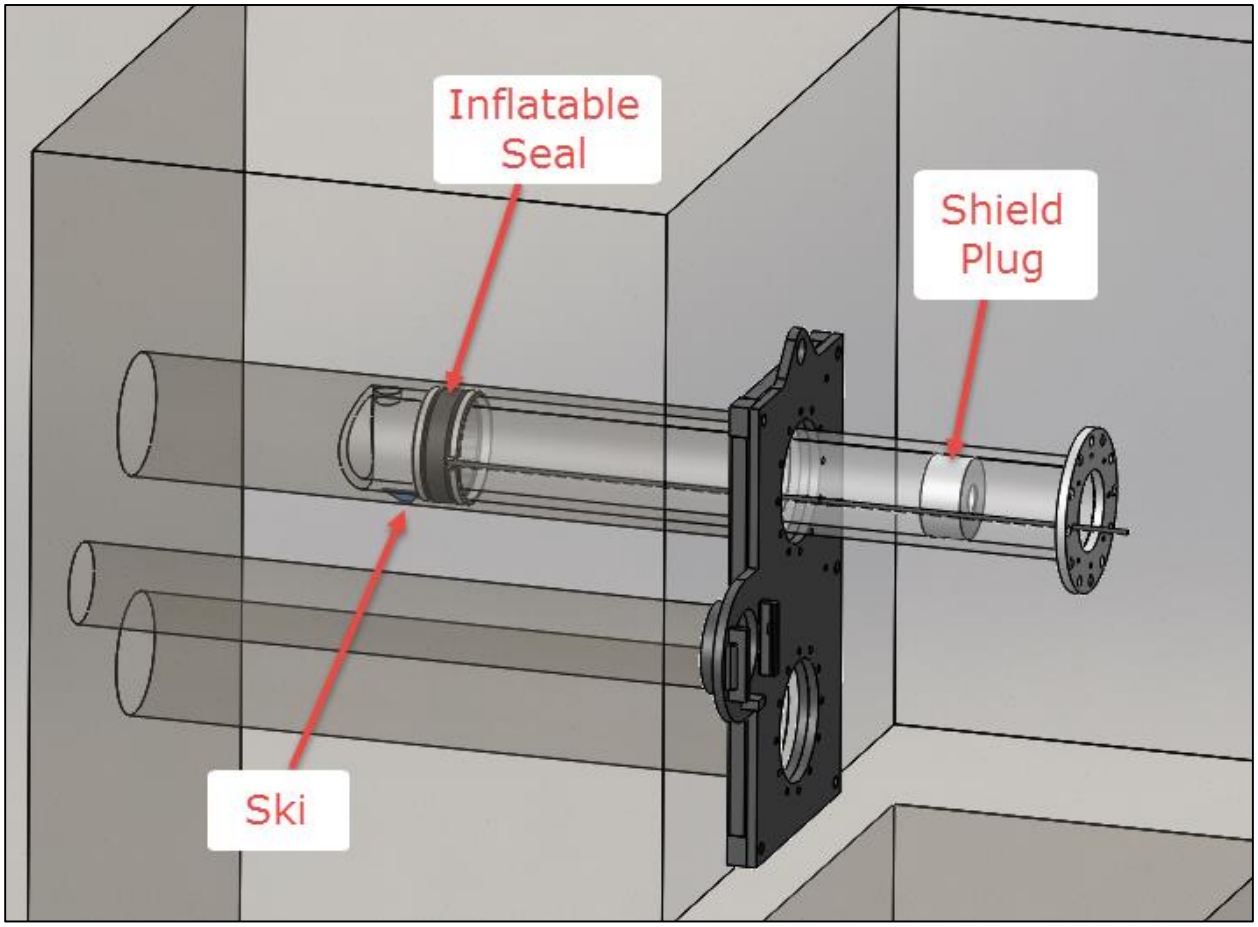

Figure 12 – Through Support Install with Support Ski

At the end of the insertion, the support ski will enter B-Cell. The Through Support can then be loosely bolted to the anchor plate, although it should not be bolted with full torque because it will be adjusted in a further step. This step is continued until the bottom Through Support is installed (Figure 13). Once the Through Supports are loosely mounted to the anchor plate, the dummy post will be installed.

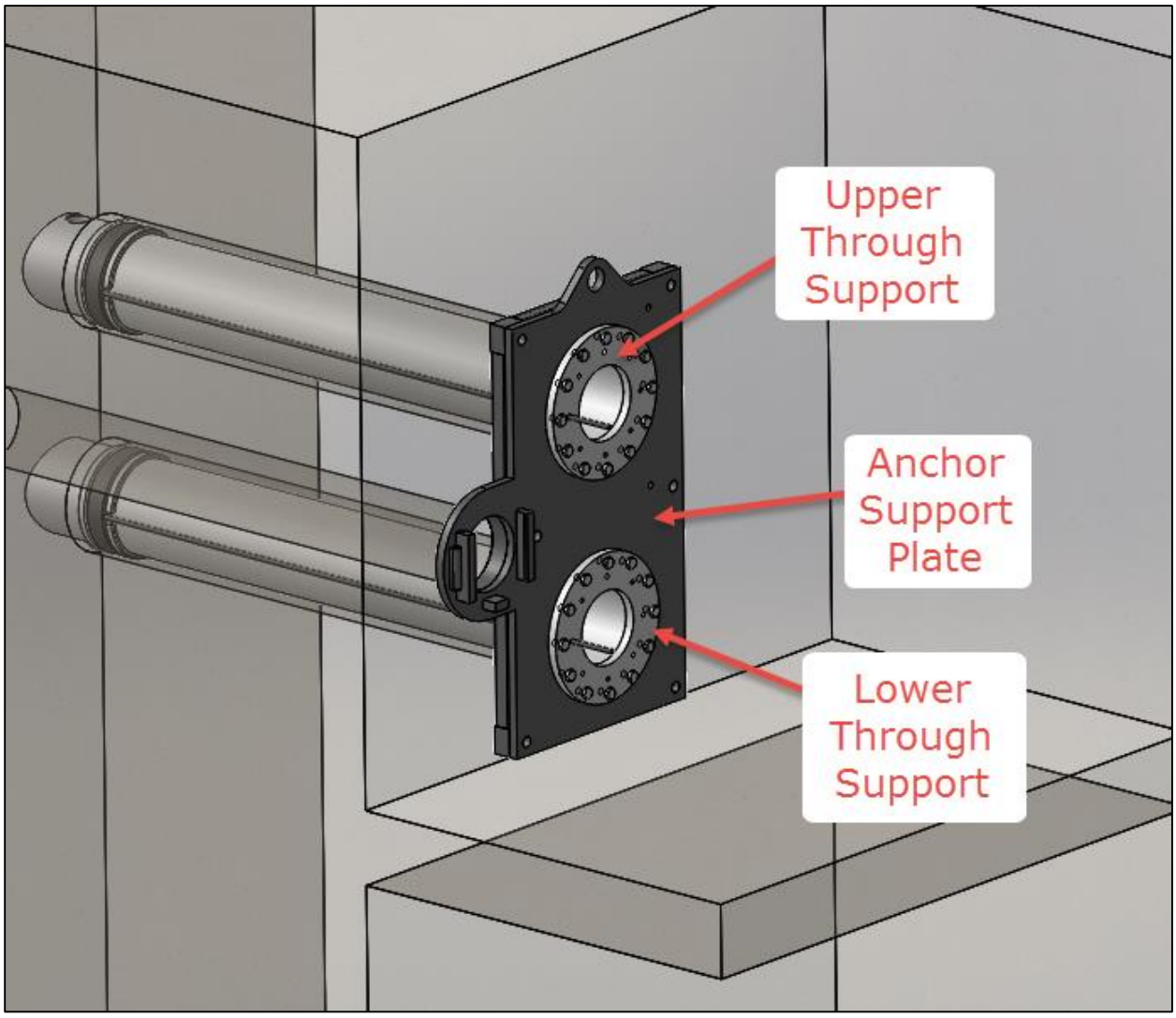

Figure 13 – Through Support Initial Mounting

The functions of the dummy post are to act as an alignment feature prior to grouting, and to shield the ends of the Through Supports to reduce contamination inside the Through Supports after installation. Four dummy posts will be provided. The number of dummy posts needed in B-Cell, and the location of the dummy posts will change during operations. When the dummy posts are not installed, they can be stored in the Airlock or other location as specified by operations personnel.

During initial installation, the Dummy Post will be placed into the Airlock using a crane or forklift. The dummy post will then be lifted with the B-Cell crane and carried into B-Cell. Using the B-Cell crane, it will be aligned with the Through Supports. After the dummy post (Figure 14) is placed on the Through Supports, the through bolts can be connected. The blank plates are installed first, and then the bolt is slid through the end supports and shield plug until the through bolts engage the dummy post (Figure 15).

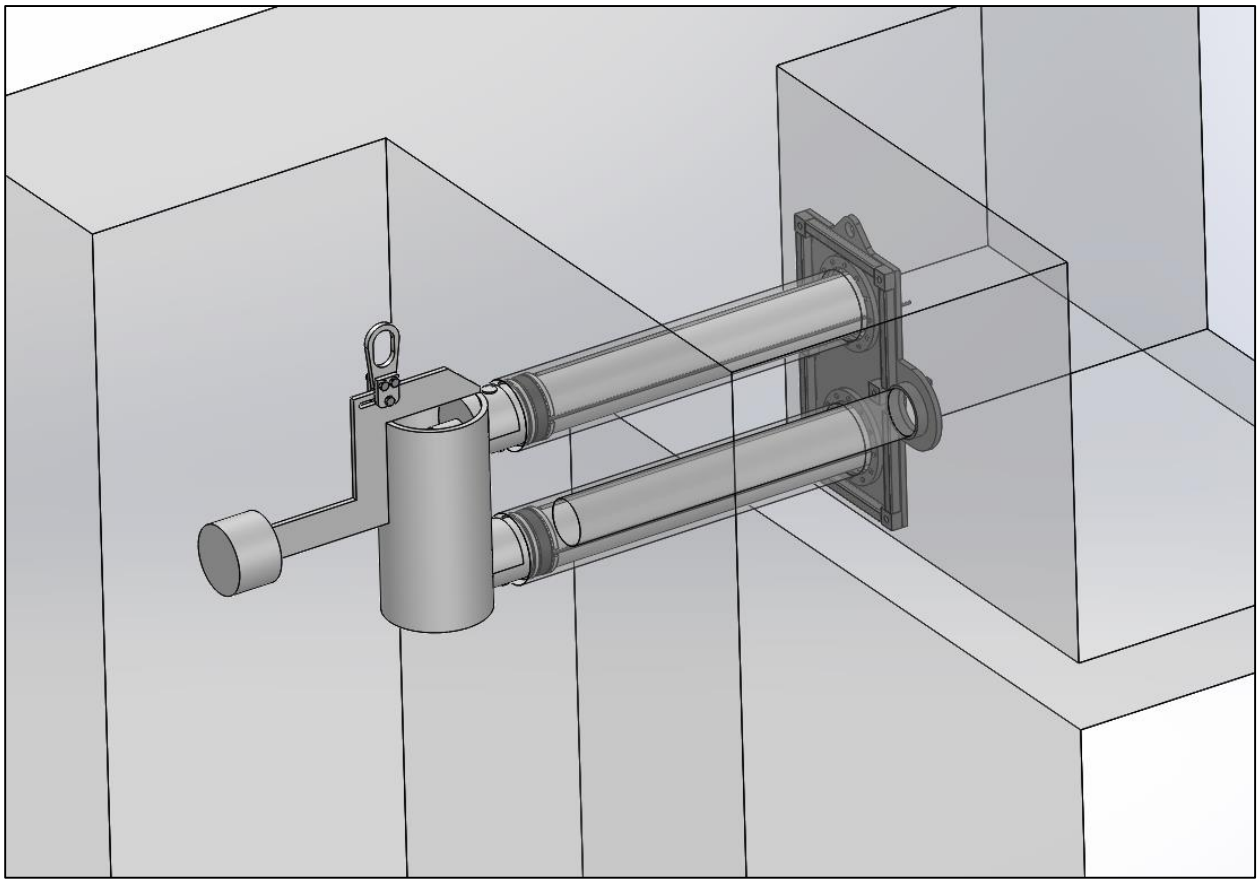

Figure 14 – Dummy Post Mounted on Through Supports

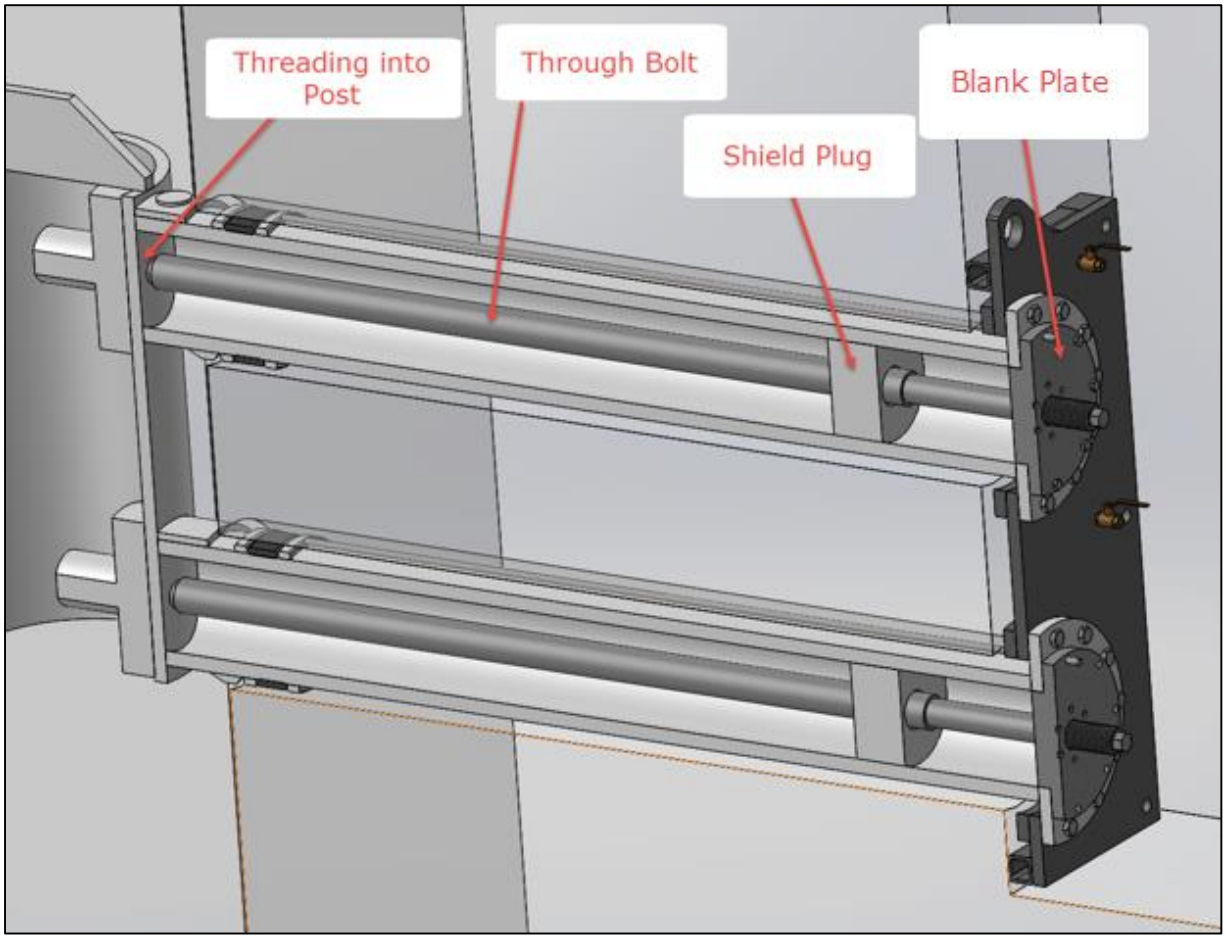

Figure 15 – Cross Section of Through Support

The small hex on the end of the main bolt is used to engage the bolt fully, but not to torque the main bolt. Due to the size of the 2-in. main bolt, a single nut would not be practical to torque (Figure 16). Instead, a jacking nut with six smaller bolts is used. The first step is to install the jacking nut on the rear thread. Then the six jacking bolts are screwed in using a pattern and torque as prescribed in KUR-1782F-SPEC-I006, *300-296 Soil Remediation Project Phase I & II – Project Fastener Specification.* This will apply significant pretension to the main bolt and REA/dummy post. It will also have the effect of forcing the Through Supports to be separated by a precise centerline distance as dictated by the dummy post. At this point, the Through Supports are only loosely attached to the anchor plate.

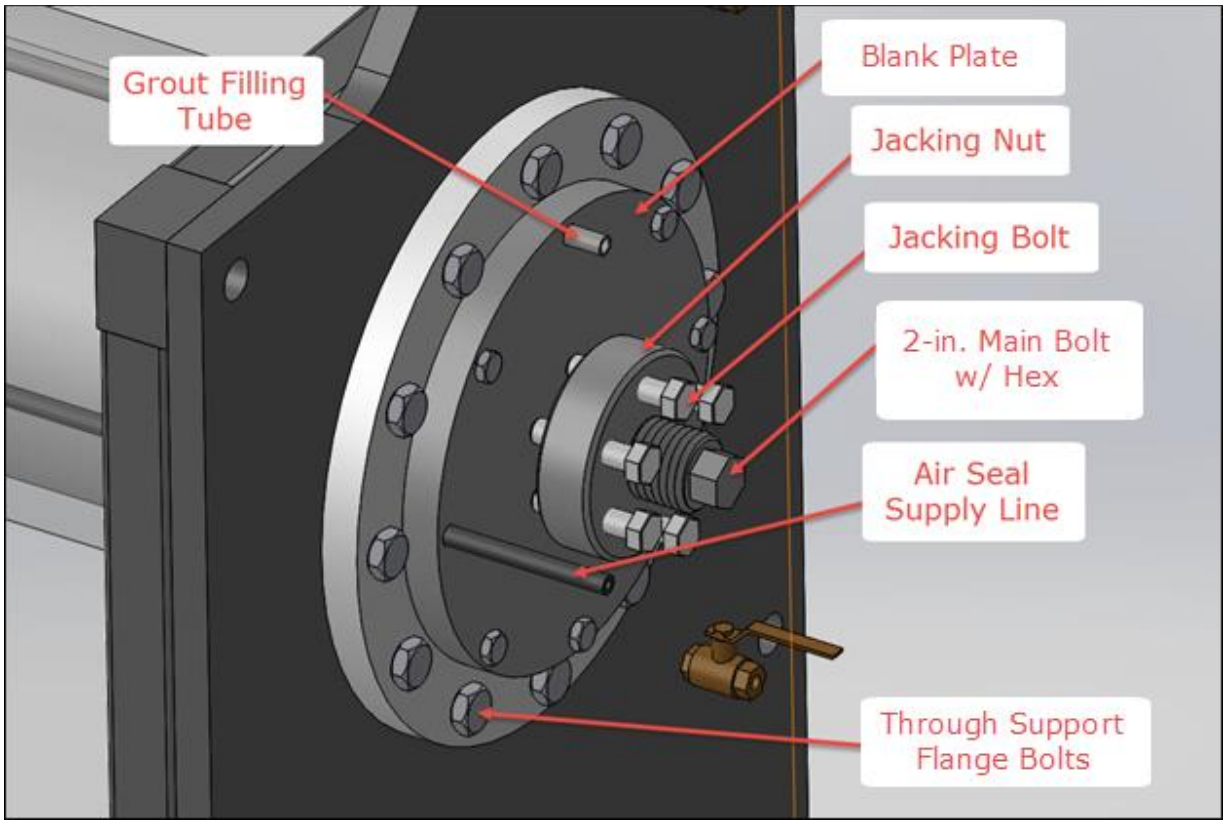

Figure 16 – Jacking Nut Details

After the bolts are tensioned, the Through Supports flange bolts can be fully torqued (per KUR-1782F-SPEC-I006). The structure of the Through Supports is now secure and ready for grouting. Note that when the dummy post is used to align the Through Supports prior to grouting, full tension of the main bolts using the jacking bolts should be used. After the grout is set, full torque should be used to secure the REA. When an REA is not installed at a Through Support Position, a Dummy Post should be installed to minimize the contamination inside the Through Support Tubes. It is only necessary to lightly tighten the through bolts to the dummy post during these operations.

3.4 Grouting Through Supports

There is a 1-in. annulus between the outside of the Through Supports and the concrete bore. It is possible that the core may not be precisely straight or centered. This gap allows the mechanical structure of the assembled Through Supports/anchor plate/dummy post to set in place. Grout will then be applied to hold this position and support the Through Supports.

To grout the Through Support, an air seal will be inflated from the gallery (Figure 17). This seal will keep grout from entering B-Cell. The grout will be pumped through grout tubes located in the blank plate of the Through Support. This seal is only required during grouting. Once the grout is set, the seal has no further function. During PoP testing, the 28 day grout strength was specified to be 5000 psi (see Section 11.0). Grout in the facility should have a strength of at least this value.

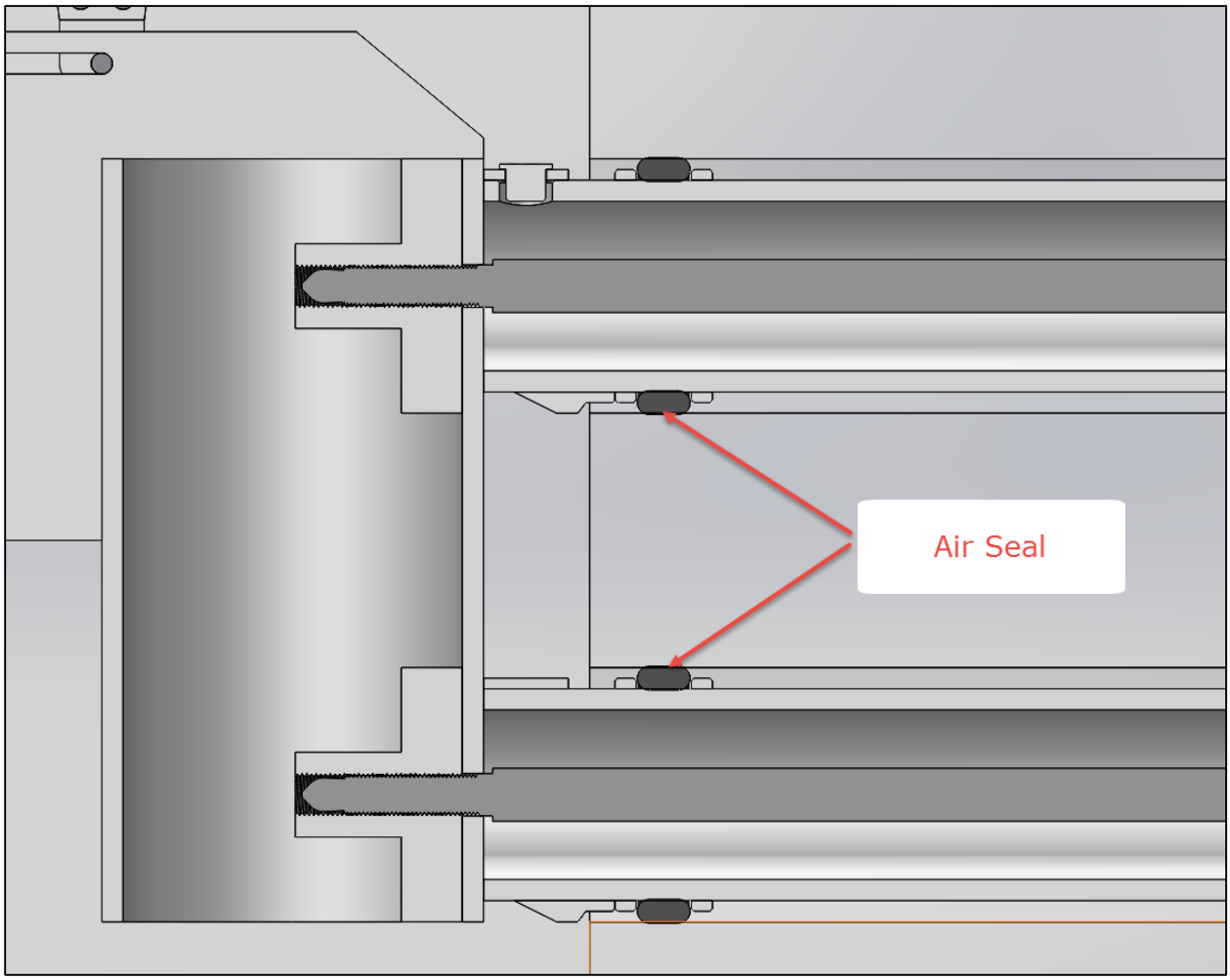

Figure 17 – Through Support Air Seal

The back side of the anchor plate is sealed against the REC wall (caulking may be required). This creates a single void space behind the anchor plate that connects the two annular spaces (Figure 19). Also provided in the design are two ball valves that vent air and monitor the level of the grout inside the anchor plate. The Through Supports also include welded rings along the length. These act as positive shear surfaces to ensure good axial loading on the grout. These are hidden in other pictures for clarity.

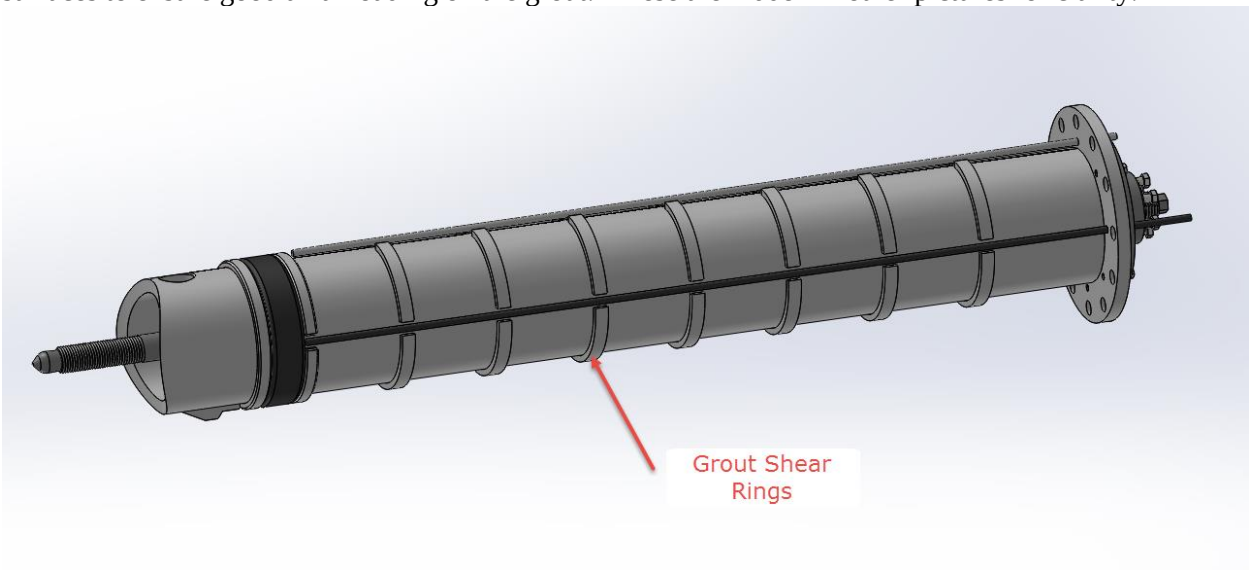

Figure 18 – Grout Shear Rings (normally not shown for clarity)

Once all the Through Supports are grouted, the anchor bolts will be removed from the anchor plate. Then the ancillary anchor plate equipment can be installed.

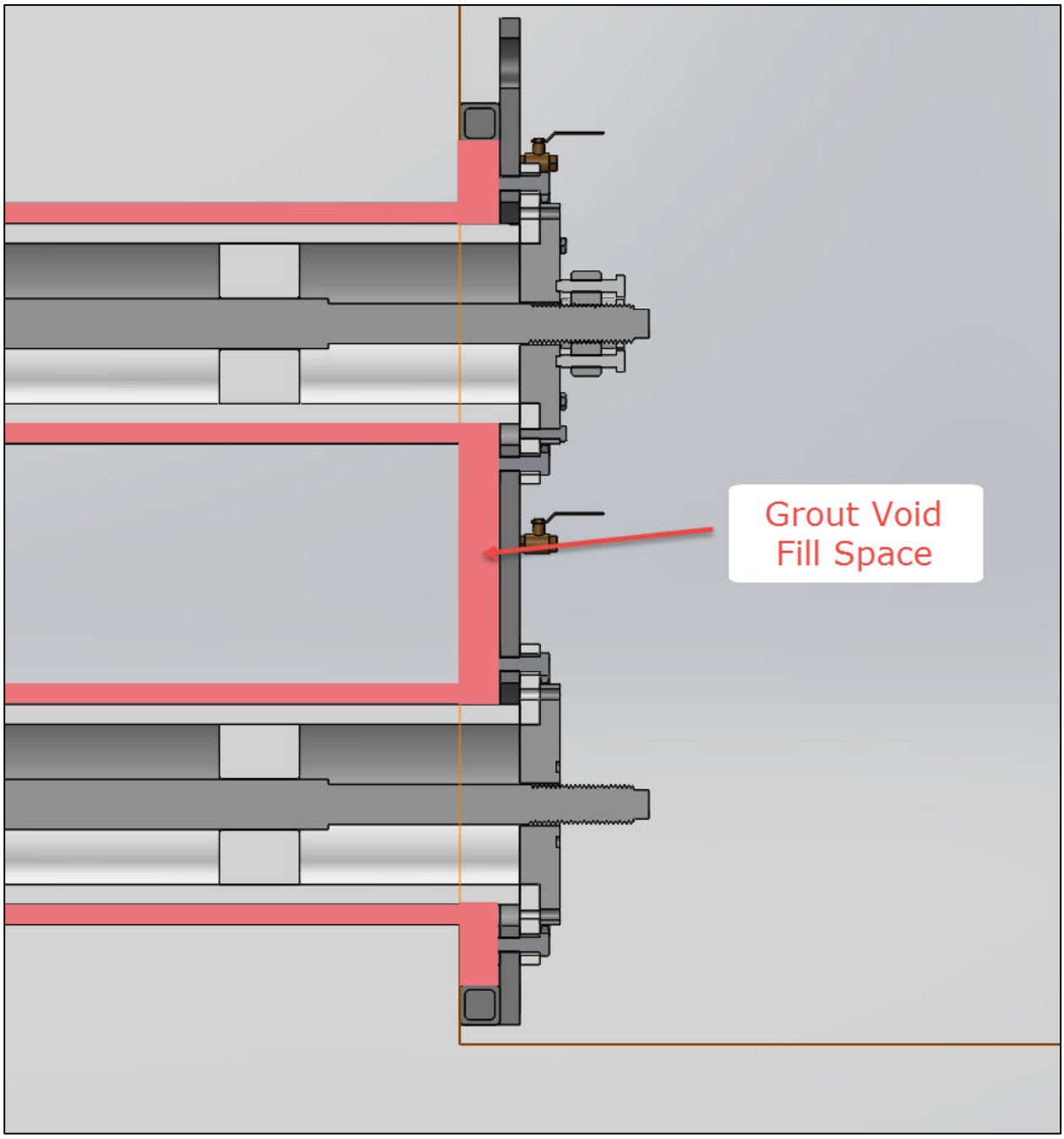

Figure 19 – Grouted Void Space

3.5 Installing Through Support Ancillary Equipment

A penetration cover (Figure 20) can be installed on the Through Support when an REA is not installed. This is a plate that is slid onto the Through Support.

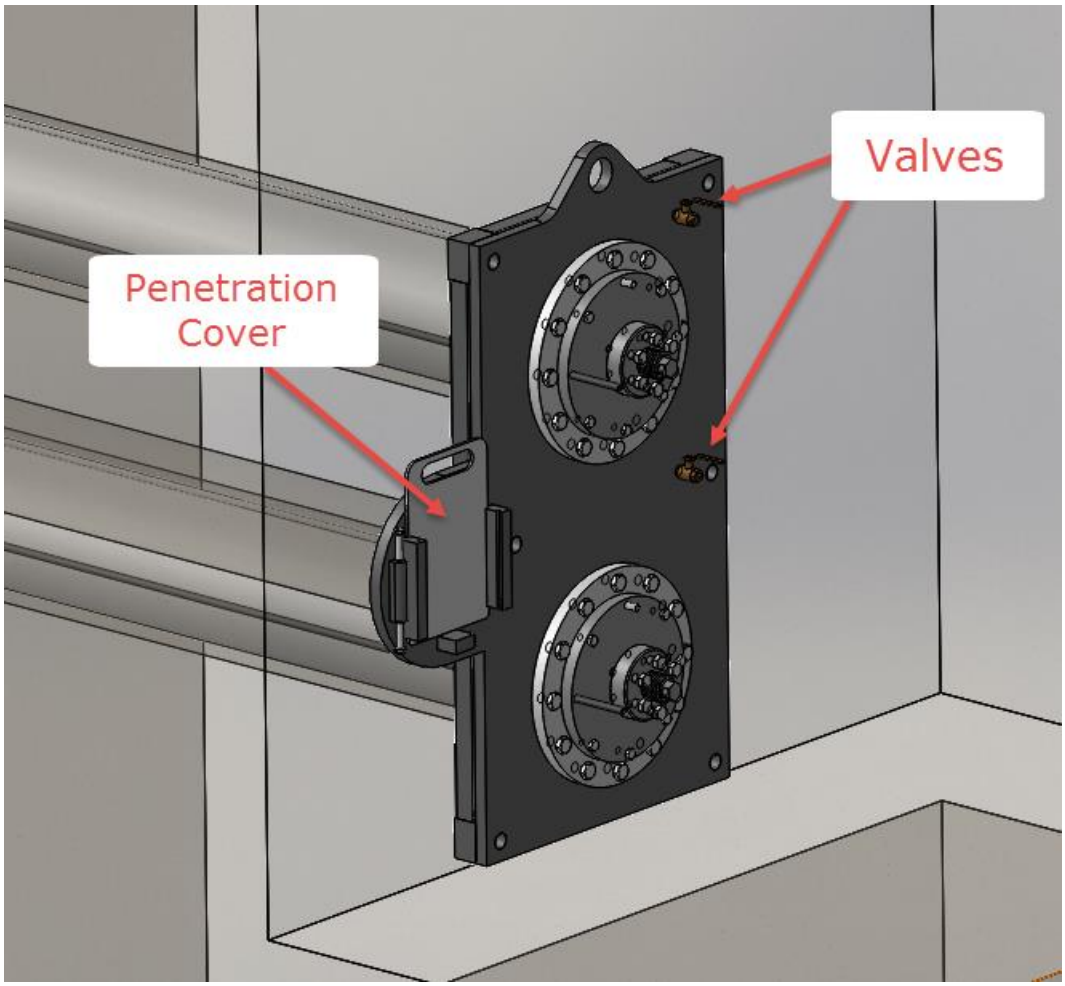

Figure 20 – Penetration Cover

The main 12-in. penetrations are fully shielded with the center bolt and shield plug in the Through Support tube. However, the side penetration for the hose management is not shielded. Therefore, a shield door assembly (Figure 21) with 2 in. of tungsten plate is installed in front of the penetration. Except when connecting the hoses, the shield plate should be positioned in front of the penetration and locked in place with the locking bar.

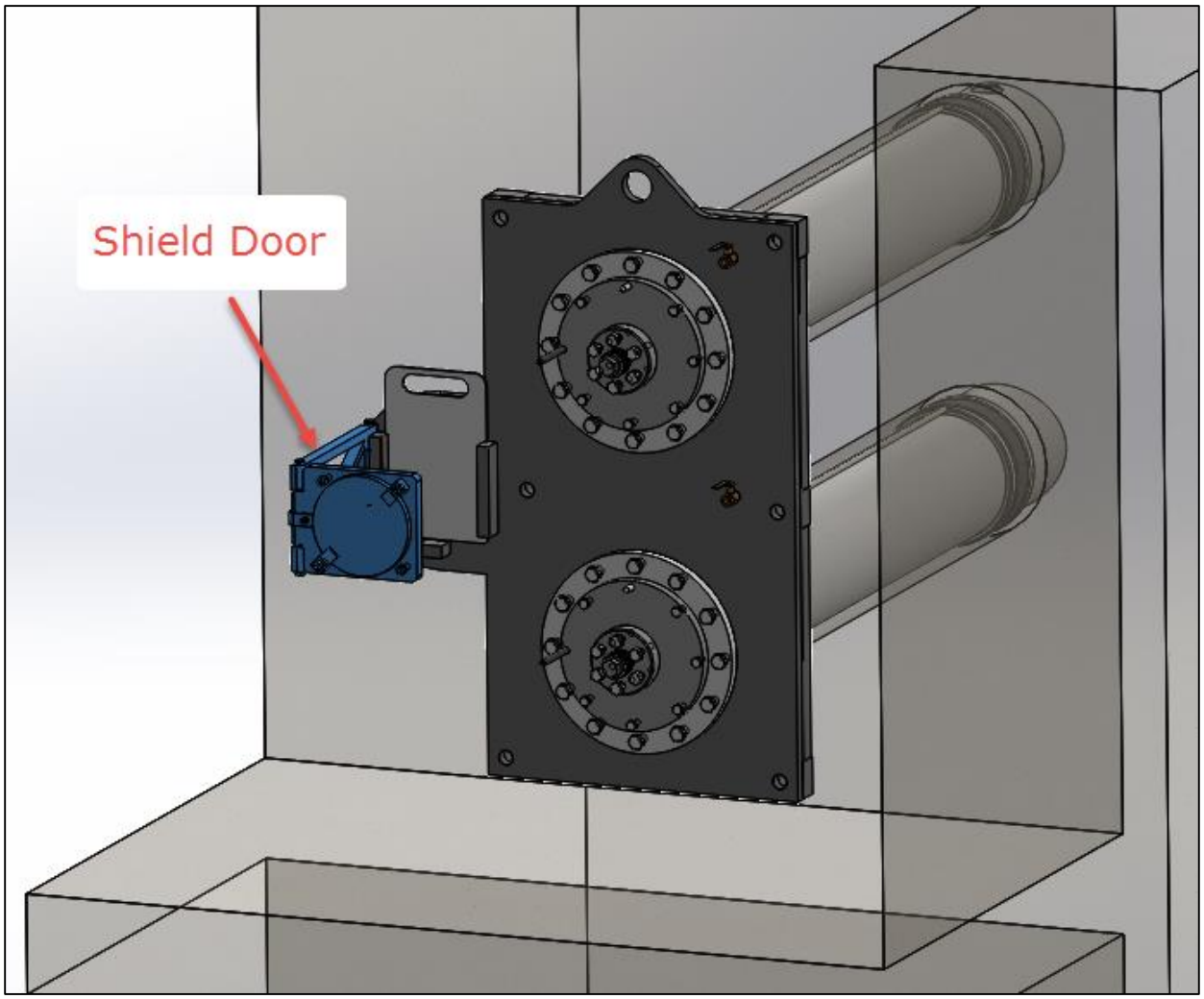

Figure 21 – Shield Door Install

3.6 Installing Upper/Lower Remote Excavator Arms

Once the Through Support plate is installed, the Upper or Lower REA can be moved into the Airlock on a REA support stand. The REA will be lifted off the stand with the B-Cell crane and carried into B-Cell. It may be necessary to carefully maneuver the REA around to fit it through the B-Cell door and to align it with the Through Supports. In the same way that the dummy post was moved to the Through Supports and placed onto them, the REA can be moved to and placed onto the Through Supports. The design of the REA post (Figure 22) has a number of features that help guide and align the REA before the through bolts are installed.

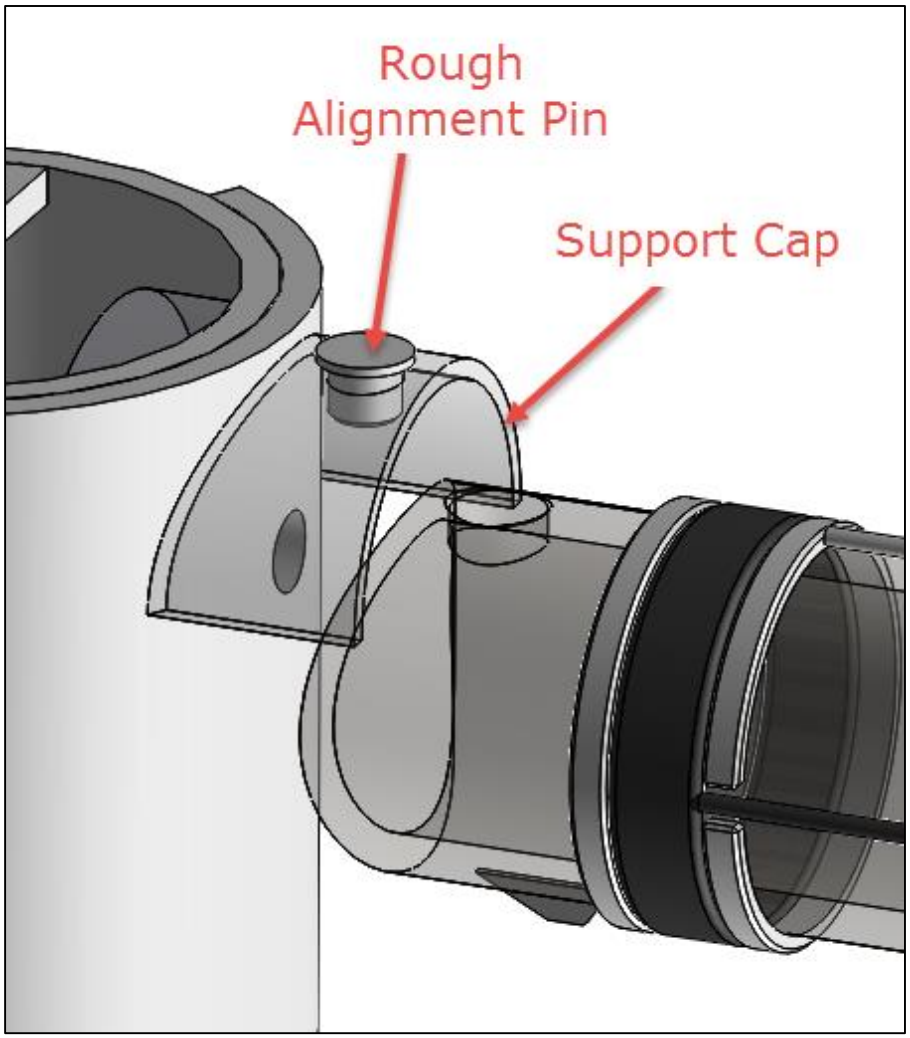

Figure 22 – Remote Excavator Arm Initial Alignment Features (Simplified Vew)

After the REA is set on the Through Supports (Figure 23), it is connected with bolts exactly as was described for the dummy post. The only exception is that after the main 2-in. bolt is snugged, the jacking bolts are fully torqued (per KUR-1782F-SPEC-I006) to create the full 75,000 lbf preload. The REA is now structurally connected to the Through Supports.

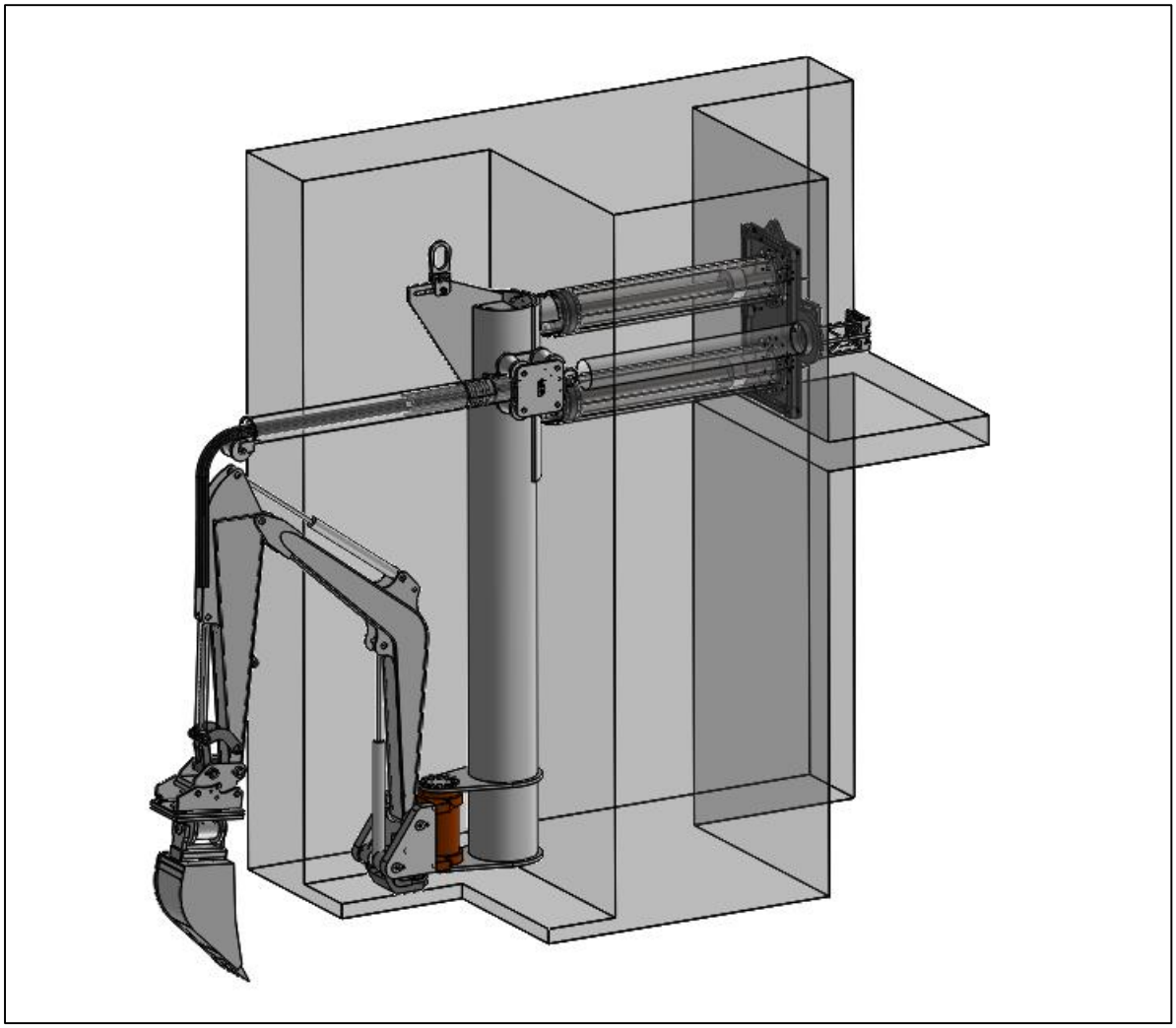

Figure 23 – Lower Remote Excavator Arm in Installed Position (Hoses not Connected)

3.7 Connecting Hoses in Gallery

To connect the hydraulic hoses from the REA into the hydraulic power unit (HPU) in the gallery the following process will be followed. There are likely to be a number of contamination control steps including bagging, taping, swabbing etc., which will be performed. These are excluded from this discussion. The first step is to remove the penetration cover plate and fold the shield plate out of the way. The provided hook tool (*REC-1230-000, *REA Hose Hook Pull Weldment*), shown in Figure 24, will be used to reach into the 8-in. penetration and grab the hose management handle which is directly in front of the penetration.

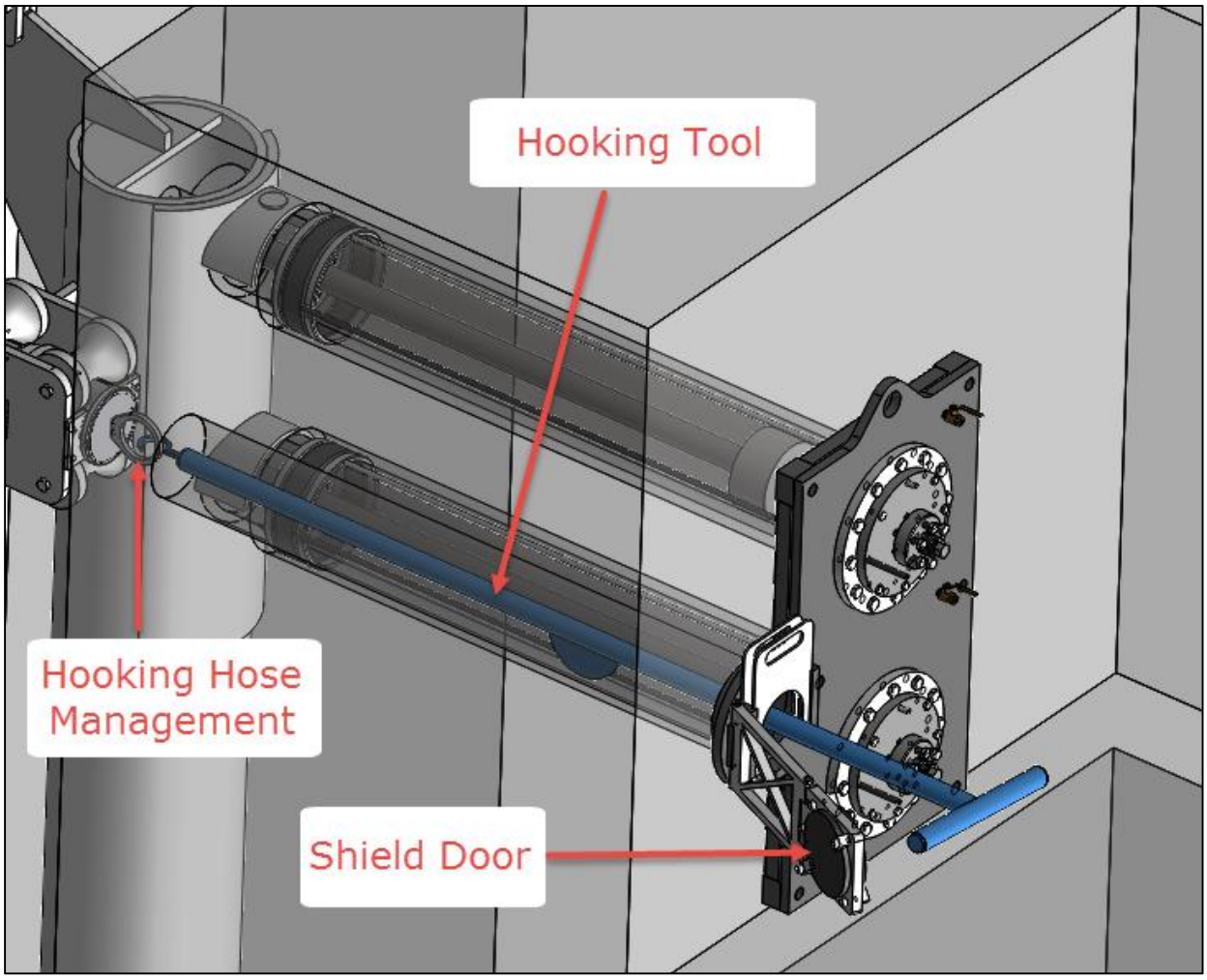

Figure 24 – Hooking Hose Management with Tool

The operators in the gallery will now pull the hose management tube into the gallery until the cap is past the anchor plate (Figure 25).

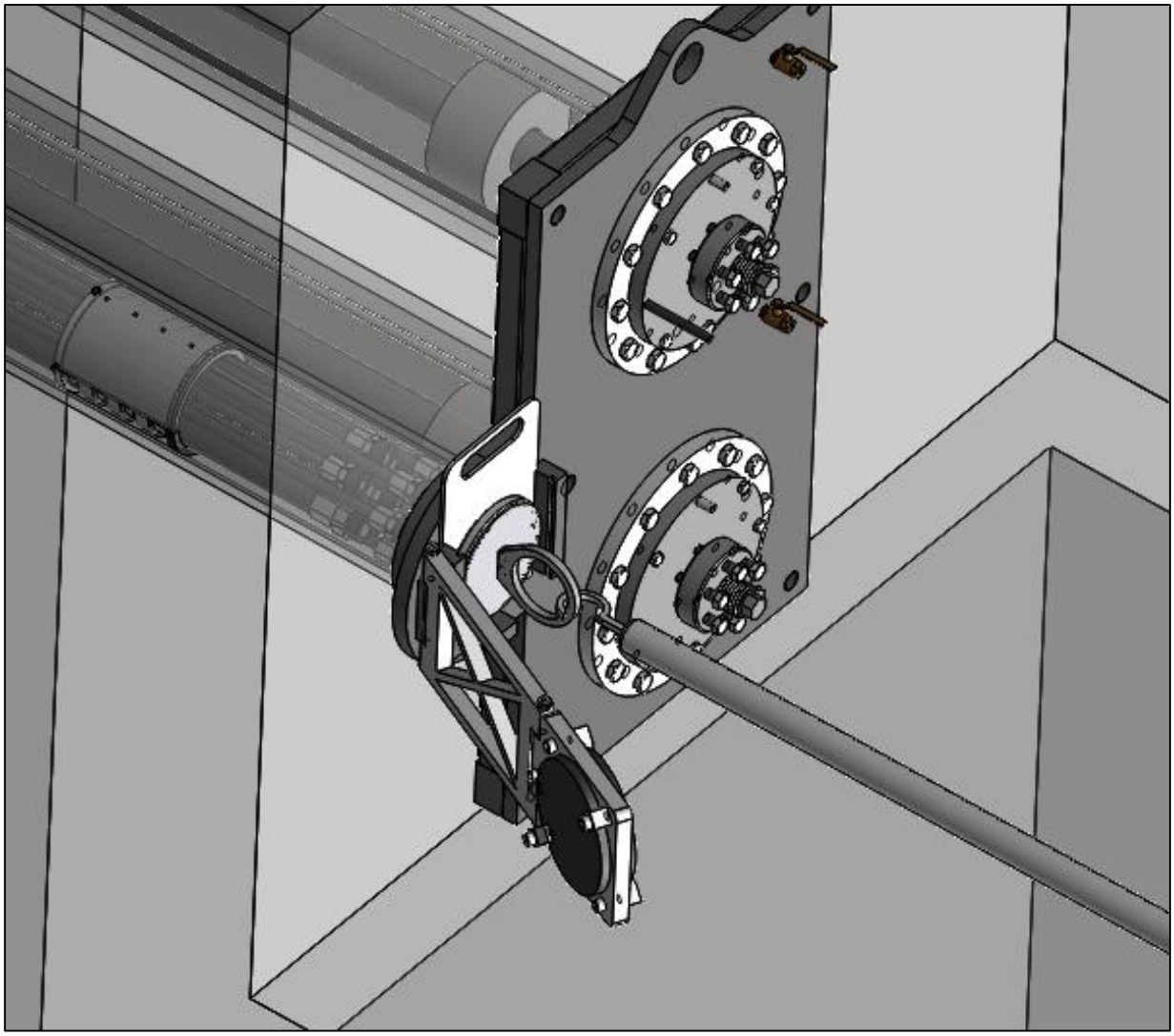

Figure 25 – Pulling Hose Management Tube into Gallery

In this position, the tube stop plate can be installed by sliding it into the metal grooves on either side of the penetration (Figure 26).

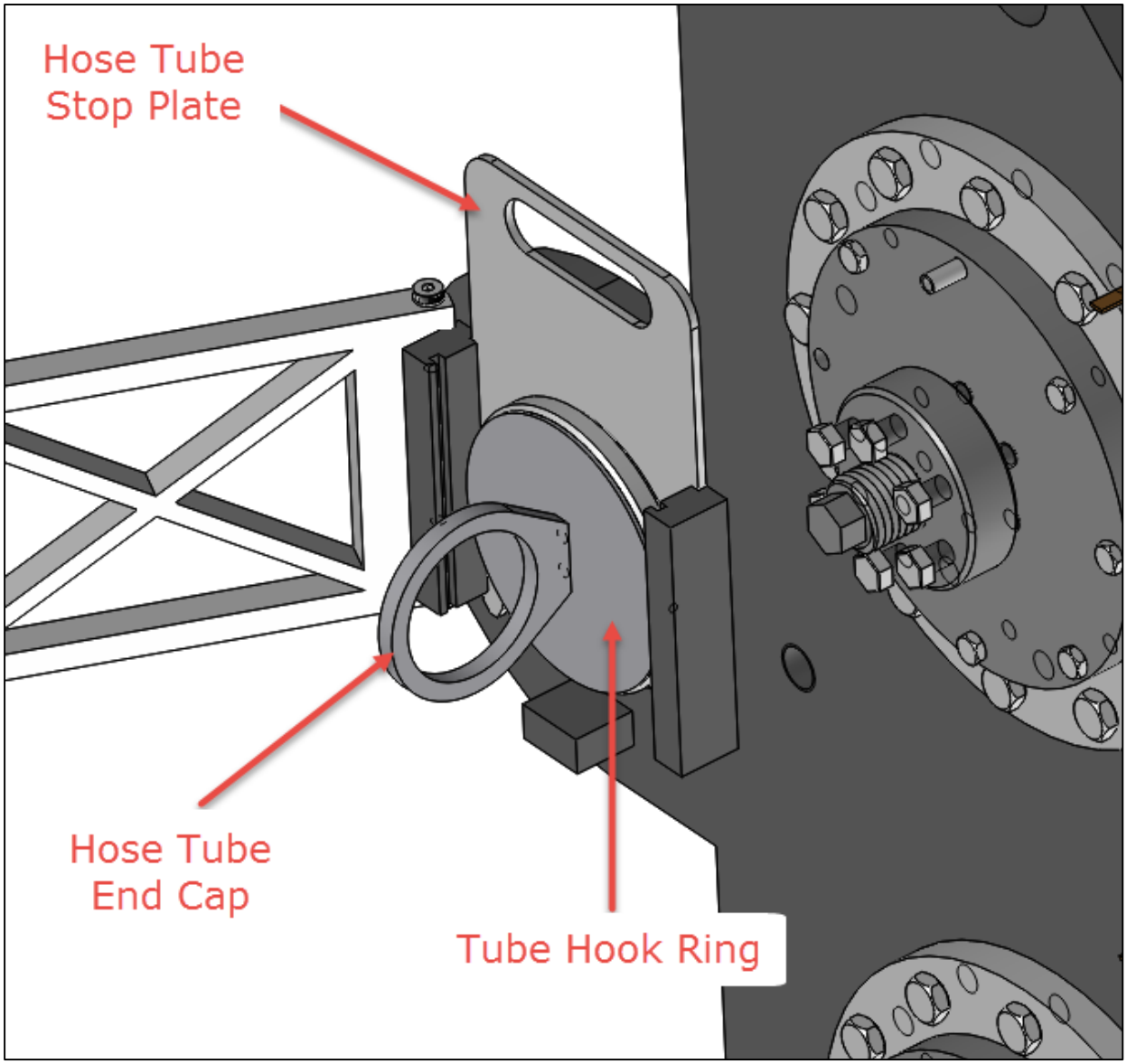

Figure 26 – Hose Tube Locked Against Anchor Plate

This plate will stop the tube from being pulled back into B-Cell during hose connection and operations. Once this plate is in place, the tube can be pushed back so it is resting against the plate. The single long bolt securing the end cap can now be removed, and the end cap can be removed exposing the hydraulic hose connections (Figure 27).

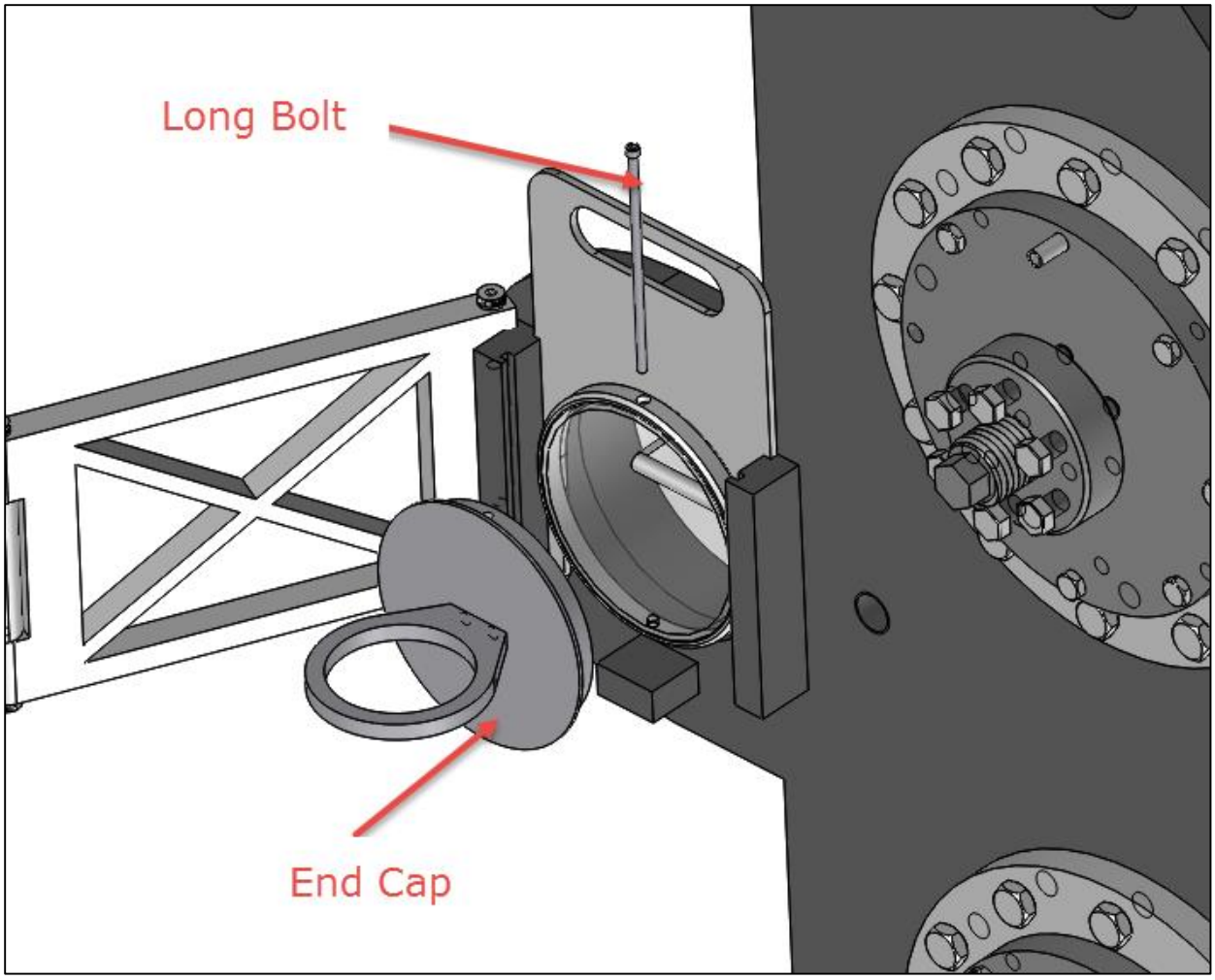

Figure 27 – Hose Management Tube End Cap Removal

A wire rope handle is provided to allow operators to pull the hydraulic bundle out of the tube (Figure 28).

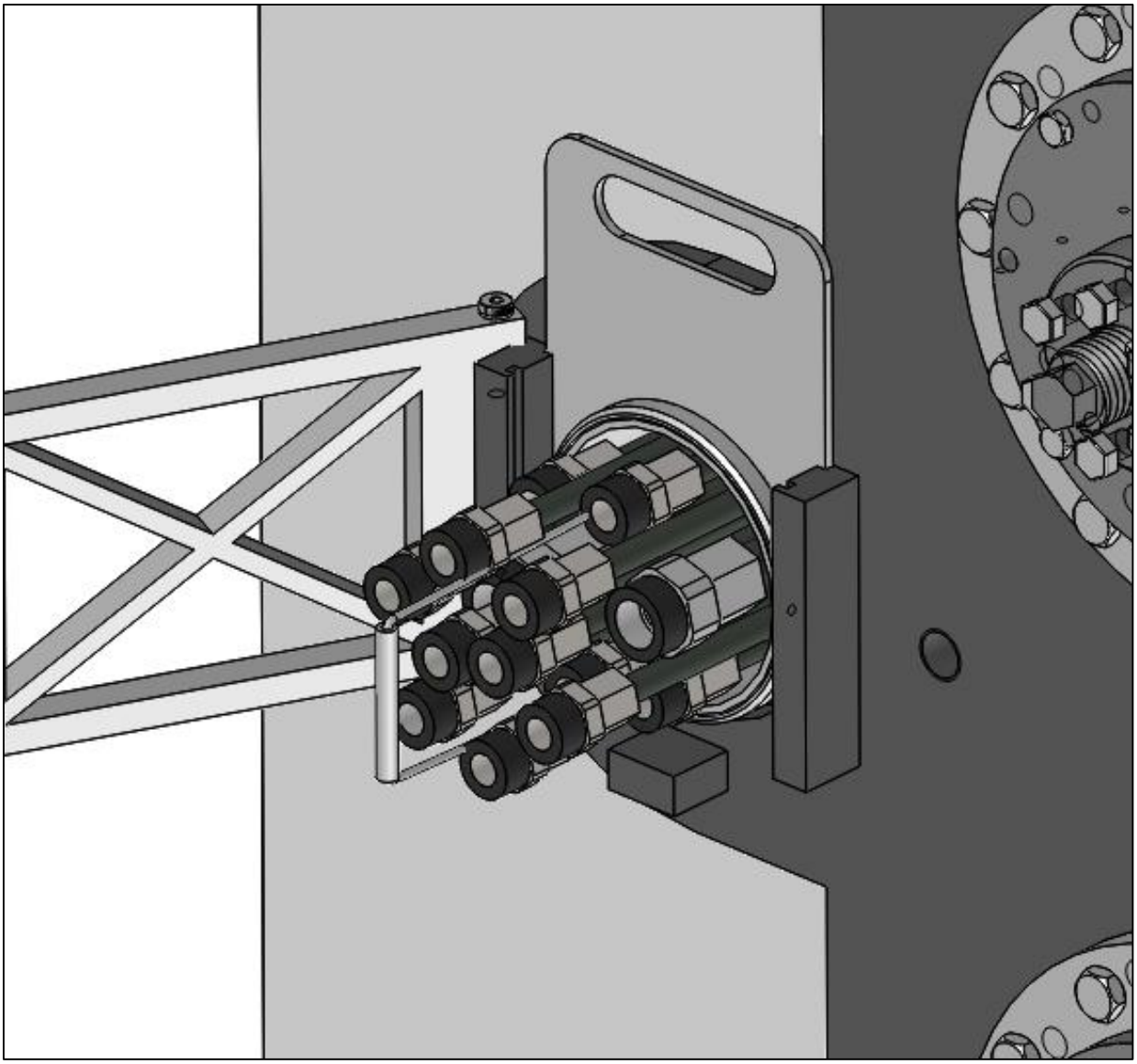

Figure 28 – Hydraulic Hose Removal from Tube

The hydraulic hose bundle is secured in a shuttle inside the tube so there is no risk of operators separating the bundle (Figure 29).

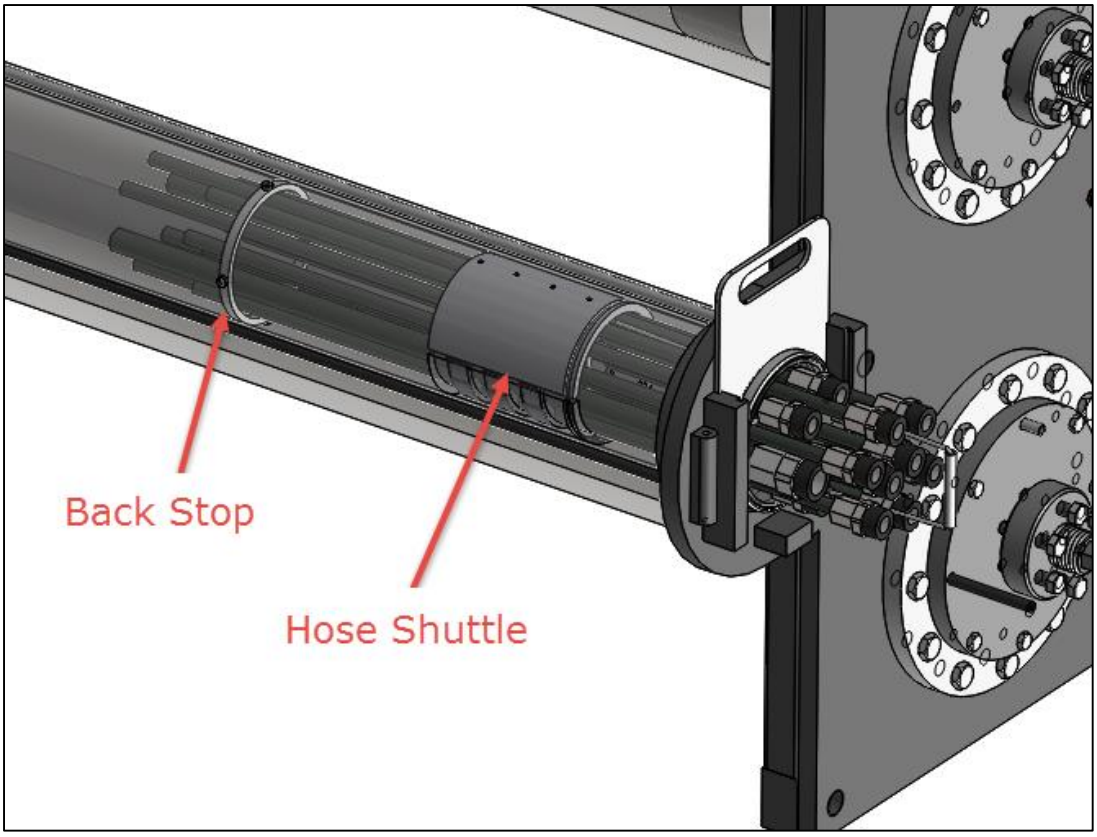

Figure 29 – Hose Bundle Shuttle and Back Stop

Operators continue to pull the hydraulic bundle through the wall until the front of the hose shuttle enters the gallery. On the hose shuttle is a groove which allows a stop plate to be installed (Figure 30).

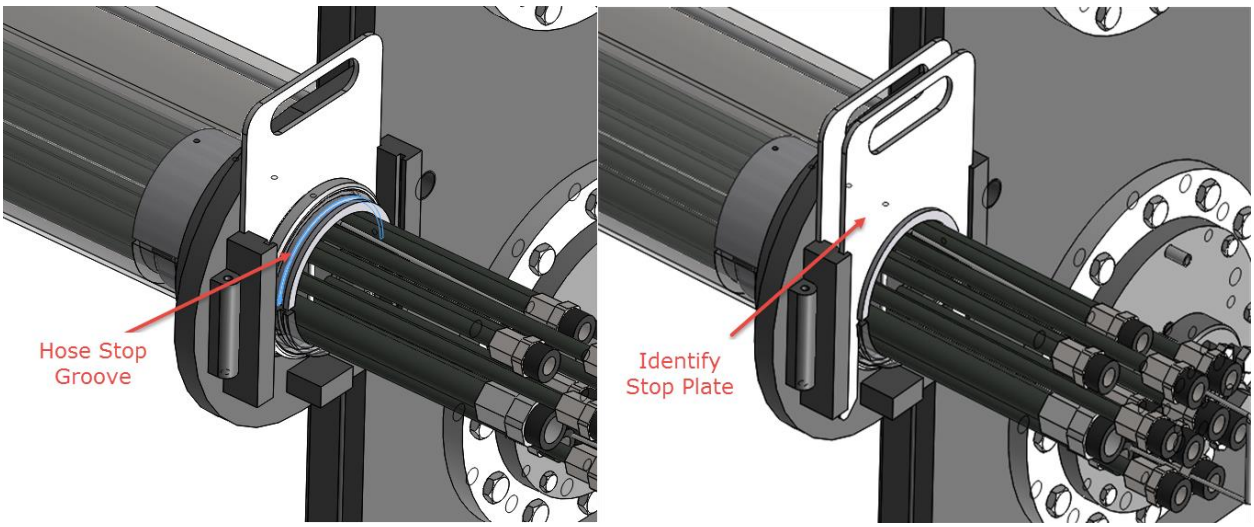

Figure 30 – Groove in Hose Shuttle (Left) and Installation of Stop Plate (Right)

Once the hose shuttle is secured, the hoses can be connected to the matching hoses on the HPU. These will be numbered, and the fittings are a no-leak, connect-under-pressure, self-sealing design (Figure 31). These require no tools to connect and, because they are self-sealing, need only hand-tight threading to fully connect them.

Figure 31 – No-Leak, Self-Sealing Hydraulic Connectors

Once the hoses are connected, they will be folded down along the wall and the shield door (Figure 32) will be positioned in front of the opening. The shield door does not plug the opening but lines up with the 8-in. penetration to block any shine path coming through the holes from B-Cell. The shield door swings freely but can be held in place with a simple side bracket which is secured with a single bolt.

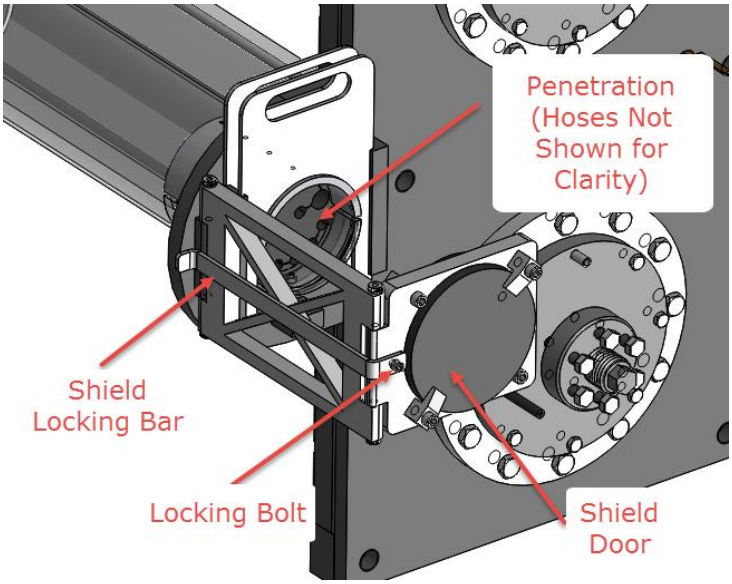

Figure 32 – Shield Door in Locked Position

3.8 Installing 4-in. Tool Hangers

After the REAs are installed and the hydraulic hoses connected, the 4-in. tool hangers can be installed. As shown in Figure 33, these are simple posts that fit into an existing 4-in. penetration in the REC. Up to five of these can be installed in the REC dependent on how many tools are being used. To install them, whatever is currently in the 4-in. penetration is removed and the 4-in. tool hanger slides into the hole. The 4-in. tool hangers are provided with an outer gallery flange and holes for securing the hanger to the wall. It is optional to bolt the 4-in. tool hanger to the wall. This does not affect the loading of the tool hanger.

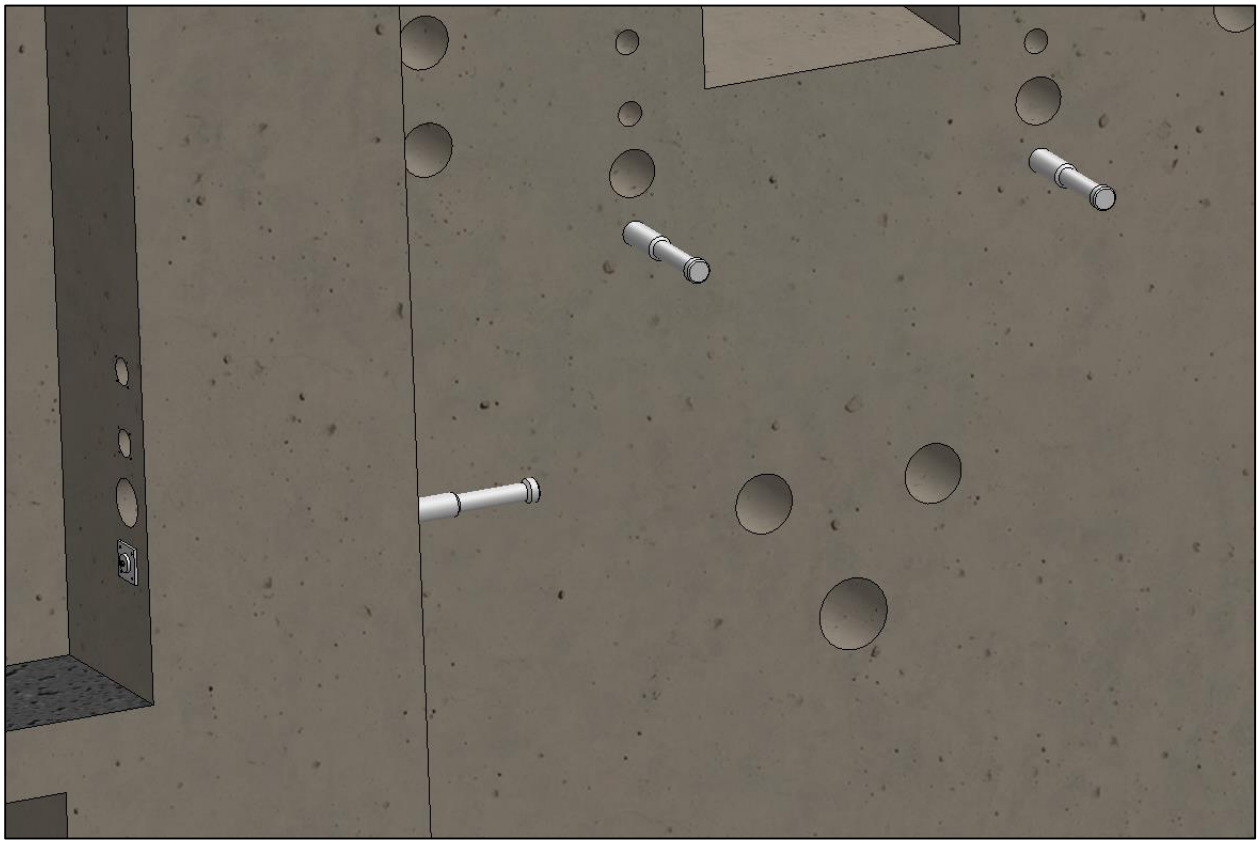

Figure 33 – 4-in. Tool Holder Installed in Penetration

3.9 Installing Tools

Once the 4-in. tool hangers are installed (Figure 34), tools can be placed into B-Cell. The order and number of tools that are placed will be determined during operations. The tools are brought into the airlock and placed on the floor. Each tool comes with a tool hanger that allows the tools to be placed on the ground. Once in the airlock, the B-Cell crane lifts the tool and hanger into B-Cell and hangs them on any one of the provided tool hangers.

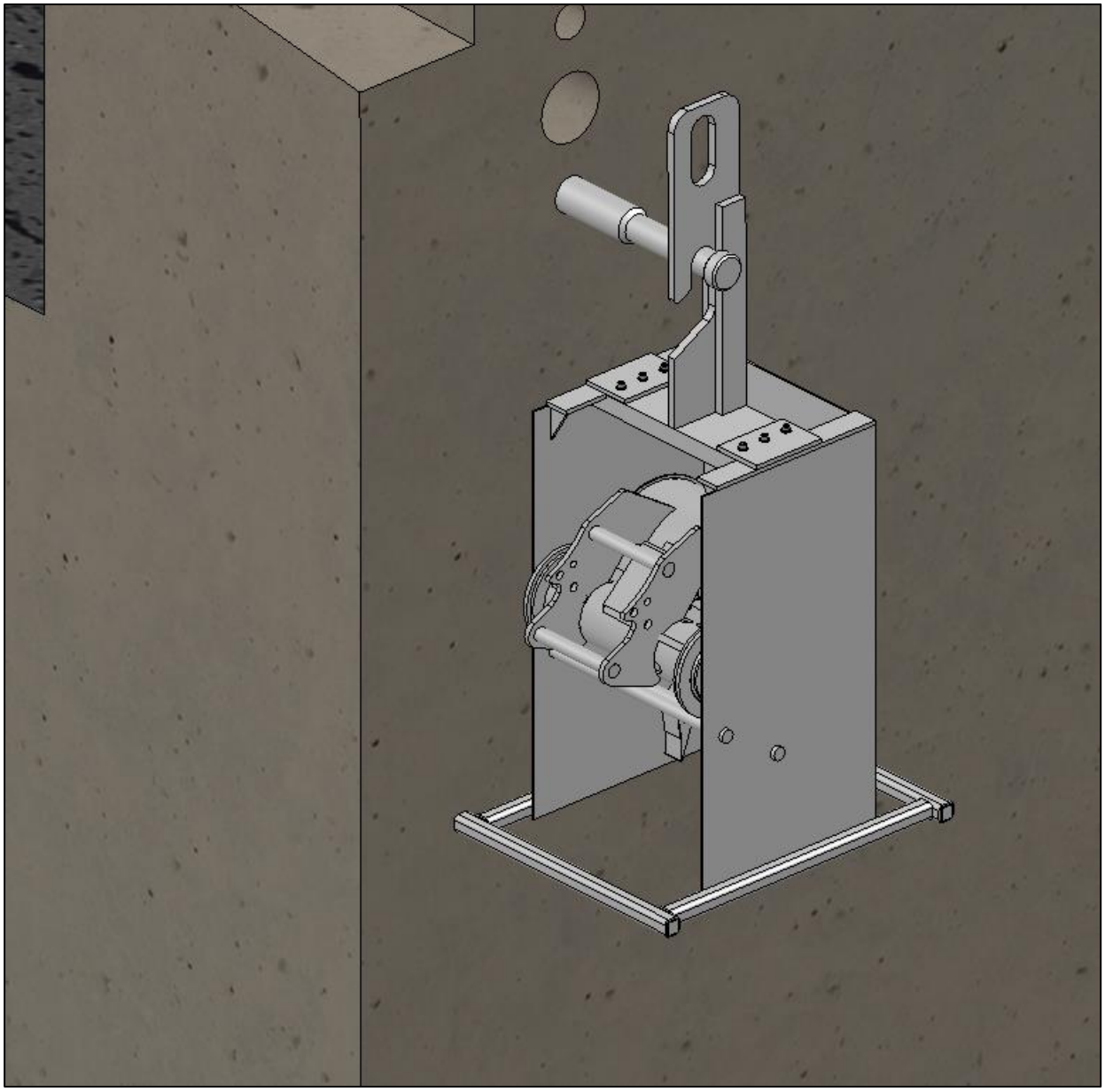

Figure 34 – Tool and Hanger Installed into B-Cell

3.10 Changing Tools on Remote Excavator Arms

Tools can be remotely changed during operations. To do this, a tool holder is lifted from the wall using the crane and presented in front of the REA. The REA is positioned so that the tool change mechanism (OilQuick) is connected; first by engaging the lower pin, and then by rotating the tool plate to engage the top (Figure 35). Once in place, the OilQuick on the REA can be actuated to secure the tool and connect the tool hoses.

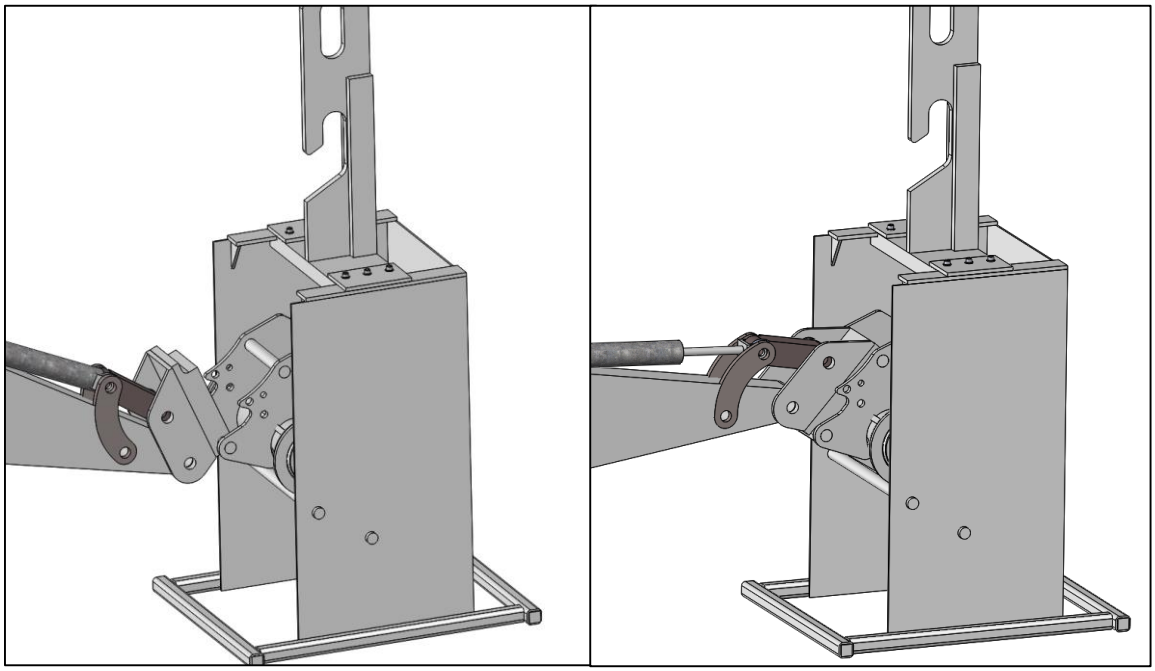

Figure 35 – Tool Change Steps

Hanging the tools on the crane during change-out creates a flexible connection that allows compliance during connection; plus, by using the crane, every tool can be presented to every REA installation point.

3.11 Relocating REA

During operations it will be necessary to relocate the REA to different Through Support locations. This is accomplished by performing the reverse of the installation procedure, lifting with the crane and relocating to a new post and performing the installation procedure again. The dummy post should be removed from the new installation position before the REA is moved. It needs to be set down either on the B-Cell or Airlock floor and then placed on the empty installation location once the REA is moved.

4.0 Description of Facility Preparation Required for Installation

Work described in Section 3.1 shall be completed prior to REA installation.

5.0 Sequencing of Installation

The following is a list of key sequencing activities that relate to the REA:

- Must be completed prior to Through Support installation:
  - Site preparation of REC walls
  - Wall coring
- Must be completed prior to Upper REA/tool operation:
  - Through Support installation
  - HPU installation
  - Control trailer installation
  - Control system installation
  - Camera and lighting system operable
- Must be completed prior to Lower REA installation:
  - B-Cell debris in corners of cell must be removed
  - Western fuel rack must be removed from REC
- Cannot be completed until after Upper REA installation:
  - B-Cell fixed debris and grout removal (and any following activities)

6.0 Description of Interfaces

Although some interfaces do exist, the REA and associated tools are basically "stand-alone."

6.1 Hydraulic Power Unit

The HPU needs to be positioned within 4 ft to each REA Through Support for hose connection.

6.2 Camera and Lighting

The camera and lighting system shall be installed to see the operations of the REA installation, tool changes, and operations.

6.3 Offset Tool

Currently, the two western REA mounting locations are only accessible by the 3.5T B-Cell crane, but not by the 6T crane. If the 3.5T crane were to fail, or otherwise become inoperable, then the 6T crane could not relocate any western REAs. Therefore, a recovery device called the offset tool has been provided in this design. The offset tool is a counterweighted lifting device which extends the reach of the 6T crane. This device is designed to interface with the mounting location and lifting features of the REAs.

6.4 Transfer Barrier

The Transfer Barrier is described in KUR-1782F-RPT-024, *90% Design Narrative for the Transfer Barrier*, but one key interface is the loading of the waste bin by the Upper REA. The details of this range of motion (ROM) are shown below (Section 9.0).

6.5 REC Cranes

The existing REC cranes are required for installation, relocation, and recovery of the REAs. The B-Cell cranes are necessary to place the REA at their locations. In the western mounting locations only the smaller 3 ton B-Cell crane can reach this location. The eastern locations can be reached by either B-Cell Crane. If the 3 ton B-Cell Crane is out of service then the Offset Lifting Tool can be used to reach the western location with the 5 ton B-Cell Crane.

7.0 Associated Equipment, Accessories, Special Tools, and Spare Parts Required

7.1 Equipment Provided by Others

The following items are required for installation of the REA but are provided by others:

- Coring equipment and mounting
- Through Support gallery transport/rigging
- Torque wrenches
- Grouting equipment for annulus
- Containment and contamination control equipment
- REC Cranes

7.2 Hose Management Retrieval Hook

Two hose management retrieval hooks shown in Figure 36, are provided. This will allow operations to reach through the REC wall to hook the hose management system.

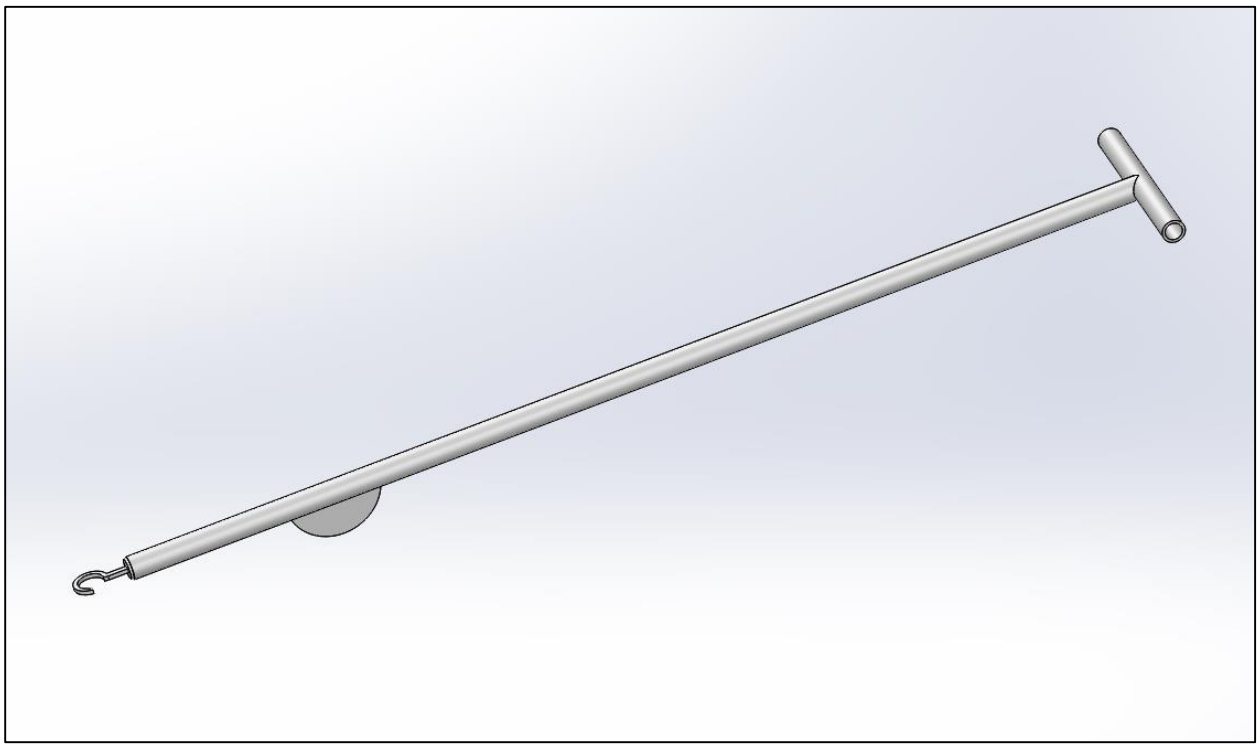

Figure 36 – Hose Management Hook Tool

7.3 Accessories and Spare Parts

No other accessories are required. Two spares of the Lower and Upper REA are provided.

8.0 Equipment Disposition

The following equipment dispositions are proposed, although final disposition is up to the operations team.

1. Through Support assemblies–abandon in place
2. Upper and Lower REAs–abandon in place

9.0 Range of Motion

The ROM of the Lower REA is designed to reach the bottom of the secondary soil level (Figure 37). The Upper REA ROM is positioned to allow it to load waste bins into the Transfer Barrier and to reach the floor of B-Cell for debris removal. The Upper and Lower REA ROMs overlap so that the Lower REA can load waste bins held by the Upper REA.

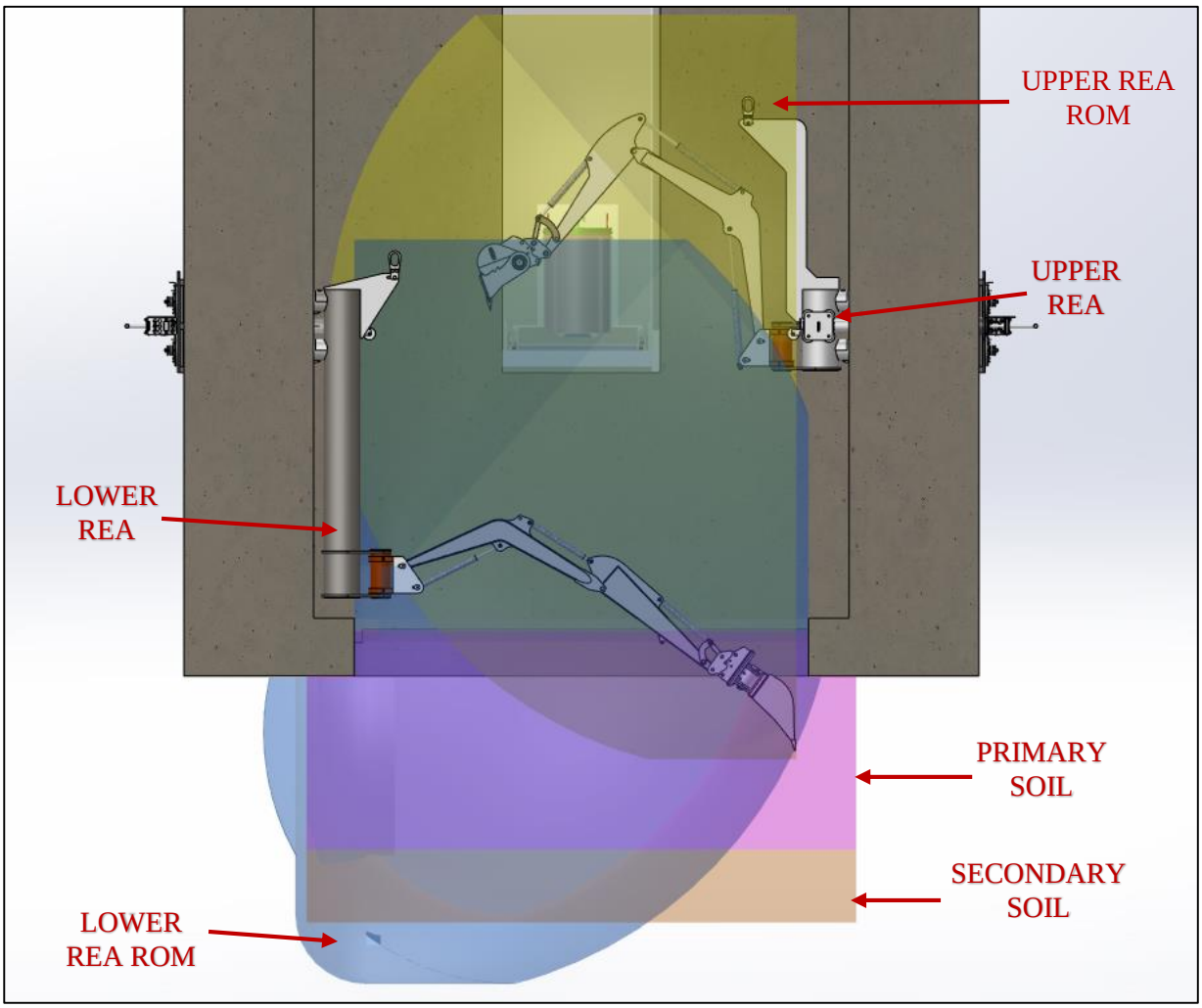

Figure 37 – Remote Excavator Arm Range of Motion

The REA has a special side tilt (PowerTilt®[4]) bucket which allows the arms to reach underneath the foundation of the cell and reach the full perimeter of the soil to be removed, as shown in Figure 38.

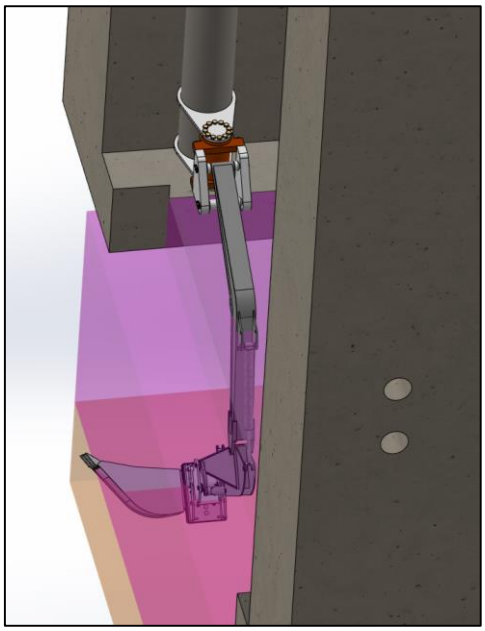

Figure 38 – PowerTilt® Bucket Reaching Underneath Foundation

Due to the sweeping motion of the REAs and the square nature of the soil removal area it is not possible to size the REAs to reach every corner of the soil without oversizing the REAs in other areas. Therefore, an optimal size for the REA excavators was chosen to reach nearly 99.5% of the primary and secondary soil (shown in Figure 39) using standard tools.

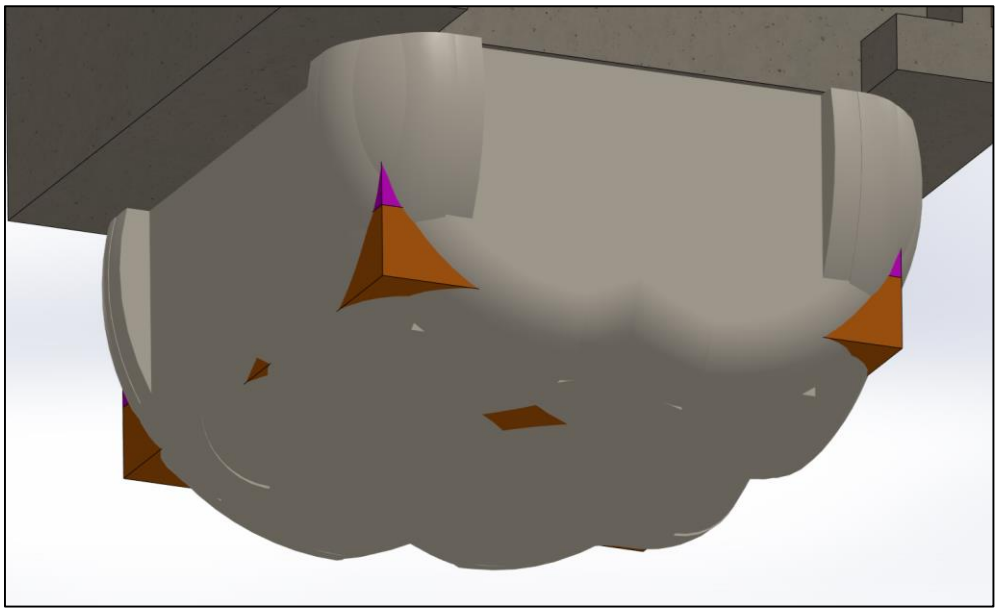

Figure 39 – Lower Remote Excavator Arm Range of Motion with PowerTilt®

[4] PowerTilt is a registered trademark of the Helac Corporation, Enumclaw, Washington.

However, to ensure that 100% of the primary and secondary soil is recovered, a structural beam can be grasped by the jaws of the PowerGrip bucket which can extend the reach of the arm up to an additional 4 ft (shown in Figure 40).

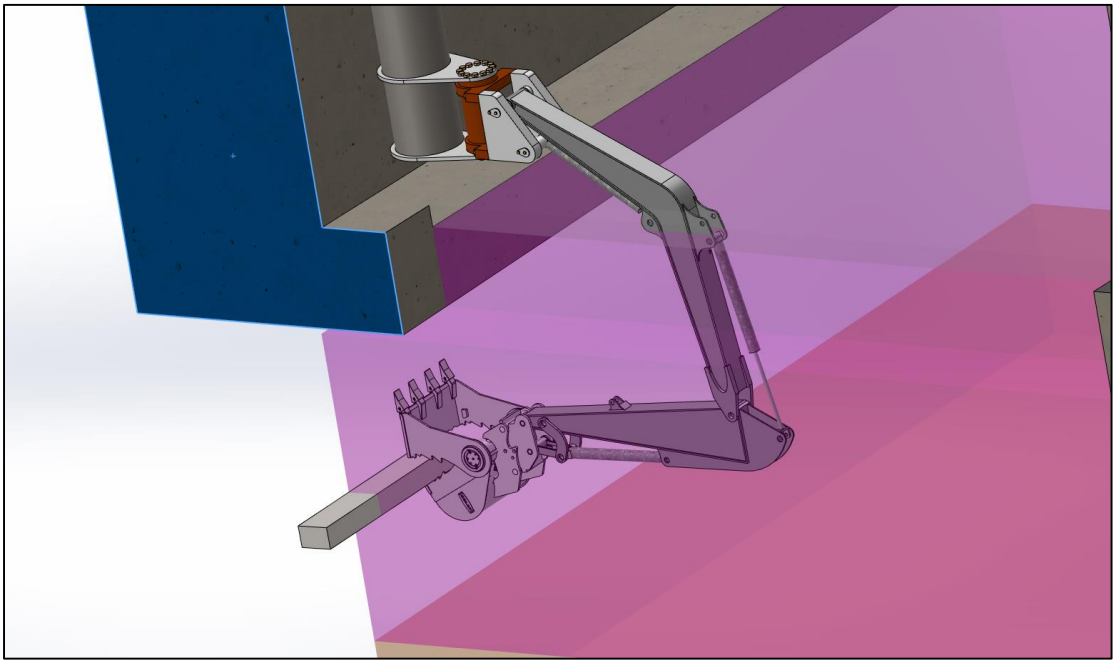

Figure 40 – PowerGrip® Bucket with Beam Showing Extended Reach

This would allow operators to pull material in the corners to within the normal reach of the REA. This expanded ROM covers all areas of the primary and secondary soil as shown in (Figure 41).

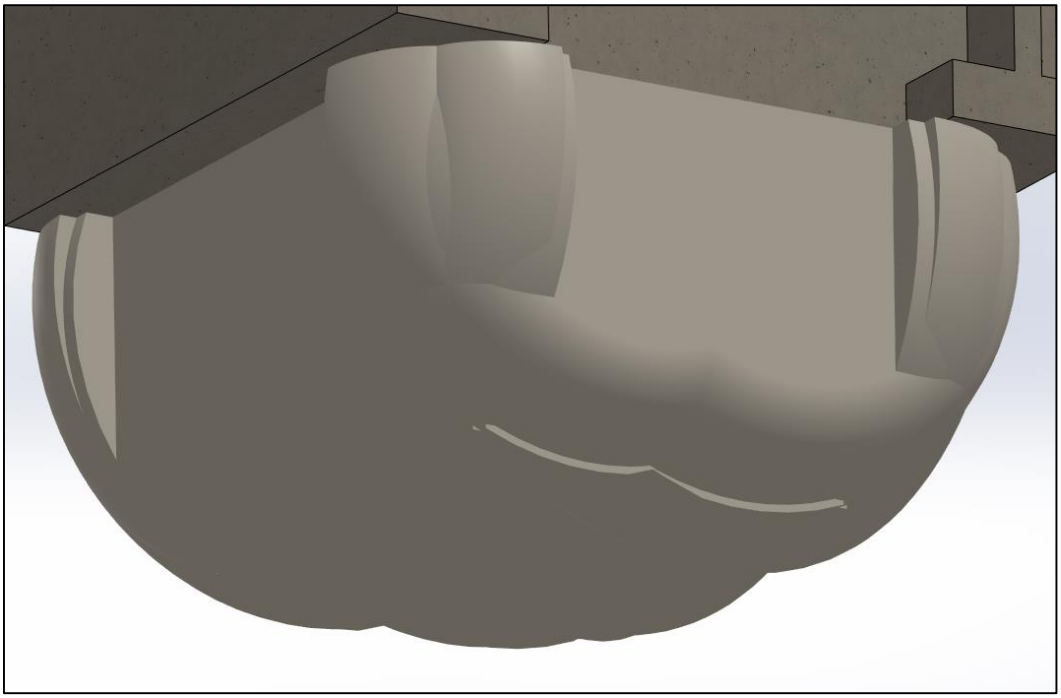

Figure 41 – Full Range of Motion Fully Covering Primary and Secondary Soil

One additional constraint exists for the operation of the Upper and Lower Helac. When a tool is positioned close to the axis of the horizontal rotate actuator (Helac), large reaction forces can occur. In KUR-1782F-CALC-M-013, *Remote Excavator Arm Analyses*, an extreme load case was analyzed where two loads (full digging force and full rotation force) were applied to the Lower REA until stresses were created that exceeded the limit of 2:1 to yield. This case showed that within 3 ft of the Helac axis when both full digging and full pivoting forces were applied, stresses could exist that where above the allowable limit (Figure 42).

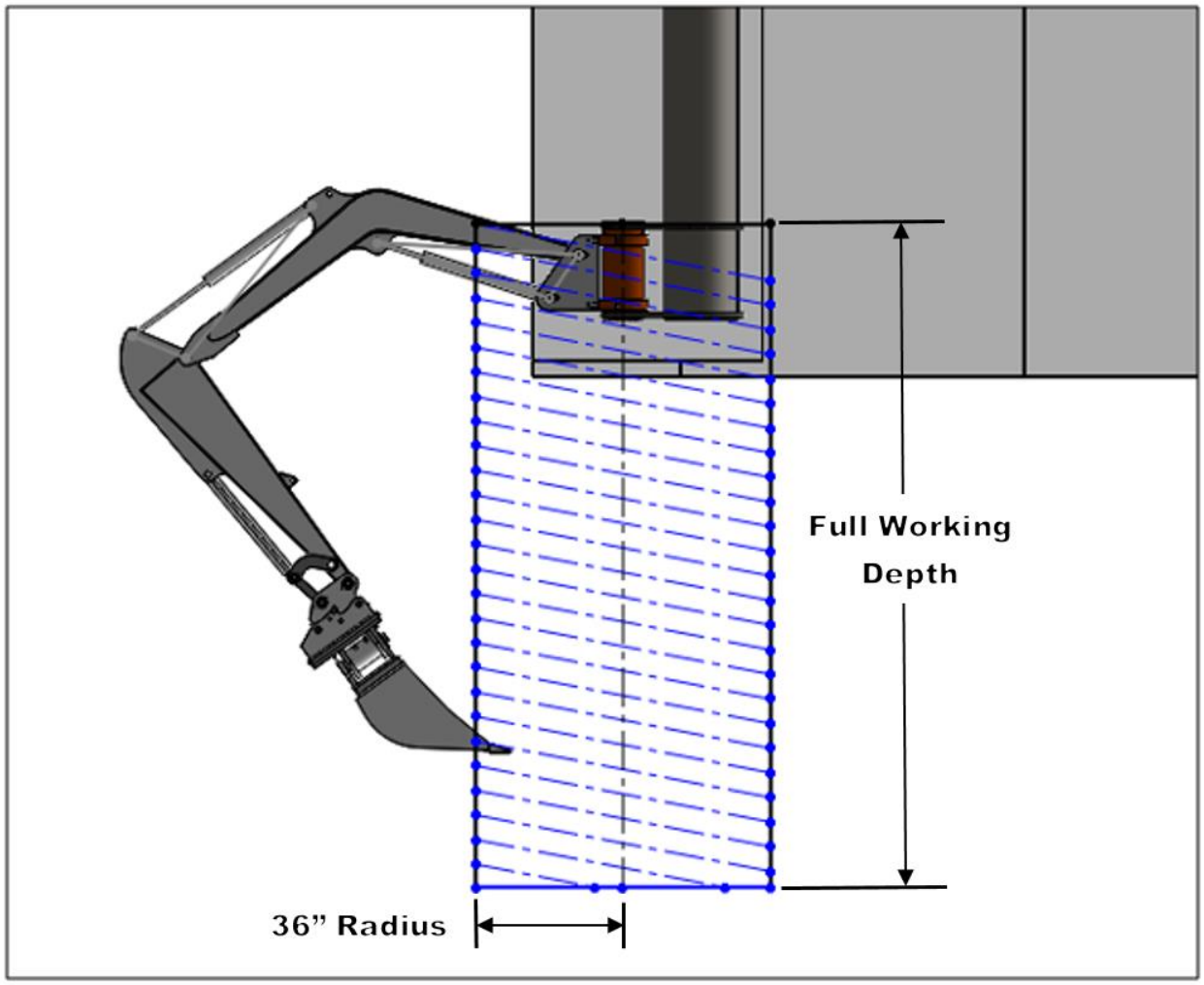

Figure 42 – Elevation View of Limited Operation Zone (in)

Note that because the reaction force of the Helac increases as the load point gets closer to the Helac axis (theoretically reaching infinity at the axis). This cylindrical volume, 36" Radius x the full operational depth of the REA is designated a Limited Operations Zone. Figure 43 provides a simplified view of reaction loads generated during pivoting.

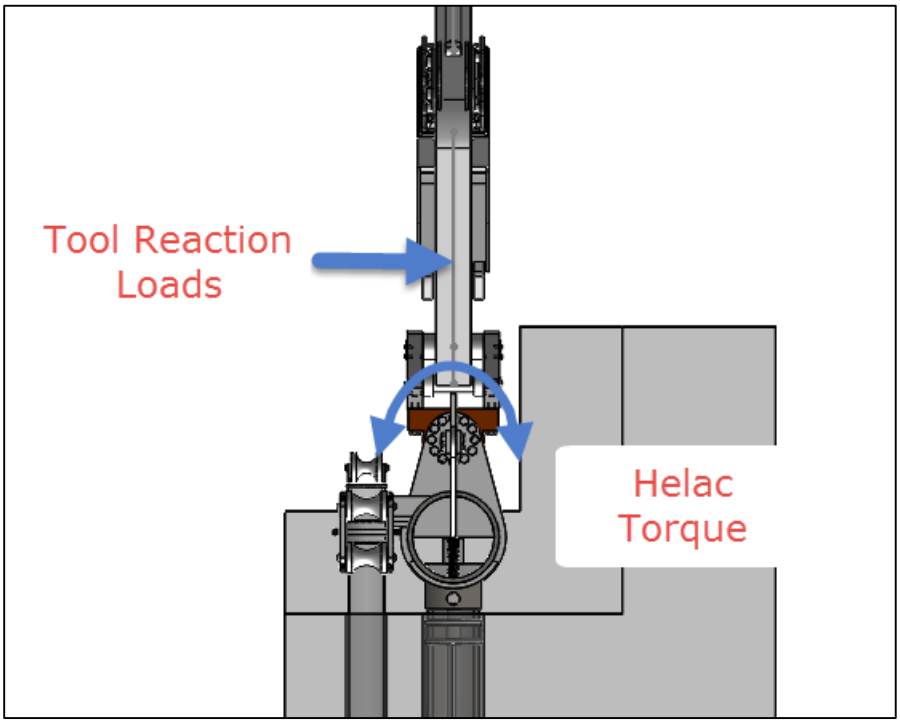

Figure 43 – Simplified View of Reaction Loads Generated During Pivoting

If all the following conditions occur, then over-stressing of the REA may occur:

- Operation of tool within 3 ft of Helac axis
- Rigid constraint held against tool (also within 3 ft)
- Full rotation load
- Full digging load

All of the above discussion assumes that full hydraulic pressure is supplied to the Helac actuator. The Limited Operation Zone can be reduced in proportion to a reduction in hydraulic pressure to the Helac. Currently the system pressure is 3000psi and the system is supplied with a pressure reducing valve whose range is 0-100% of system pressure. This engineering control allows the operations team to set the working pressure of this actuator and reduce the Limited Operation Zone. The value of this setting should be set during testing. During AED, the pressure was set to 50% (1500psi) of the system pressure and operators stated that the force supplied during side loading was acceptable for use during those limited operations.

Additionally, operators should be trained to avoid these conditions. However, the REAs can be used near the Helac as long as the above issues are considered and in particular heavy side loads are not created.

10.0 References

KUR-1782F-CALC-M-013, *Remote Excavator Arm Analyses*, Latest Revision, Kurion, Inc., Richland, Washington.

KUR-1782F-DWG-M-REC-1100-000, *REA Through Support Assembly*, Latest Revision, Kurion, Inc., Richland, Washington.

KUR-1782F-DWG-M-REC-1200-000, *Overall Assembly, Lower REA*, Latest Revision, Kurion, Inc., Richland, Washington.

KUR-1782F-DWG-M-REC-1230-000, *REA Hose Hook Pull Weldment*, Latest Revision, Kurion, Inc., Richland, Washington.

KUR-1782F-DWG-M-REC-1300-000, *Overall Assembly, Upper REA*, Latest Revision, Kurion, Inc., Richland, Washington.

KUR-1782F-DWG-M-REC-1400-000, *4" Tool Hanger*, Latest Revision, Kurion, Inc., Richland, Washington.

KUR-1782F-DWG-M-REC-1410-000, *Long Reach Bucket and Tool Holder Assembly*, Latest Revision, Kurion, Inc., Richland, Washington.

KUR-1782F-DWG-M-REC-1420-000, *Powergrip Bucket Assembly and Tool Holder*, Latest Revision, Kurion, Inc., Richland, Washington.

KUR-1782F-DWG-M-REC-4390-000, *Tool Holder Assy-REA Bin Lifting Tool*, Latest Revision, Kurion, Inc., Richland, Washington.

KUR-1782F-RPT-024, *90% Design Narrative for the Transfer Barrier*, Latest Revision, Kurion, Inc., Richland, Washington.

KUR-1782F-RPT-037, 2015, *90% Design Report Narrative for Miscellaneous Mechanical Equipment*, Latest Revision, Kurion, Inc., Richland, Washington.

KUR-1782F-SPEC-I006, 2015, *300-296 Soil Remediation Project Phase I & II – Project Fastener Specification*, Latest Revision, Kurion, Inc., Richland, Washington.

KUR-1782F-DWG-M-1100-000, *Through Support Anchor Plate Weldment*, Latest Revision, Kurion, Inc., Richland, Washington.

11.0 Compressive Strength Reference

Applus RTD
37 Franklin Street • Suite 400 • Buffalo, New York 14202
(716) 853-2611 • Fax (716) 853-2619
www.applusrtd.com Email: contract.buffalo@applusrtd.com

Applus RTD

COMPRESSIVE STRENGTH OF HYDRAULIC CEMENT MORTARS ASTM C-109

Project: POP
Client: FE&C
Contractor: FE&C
Project No.: 07.006818/007 Report No.: R-14-1944
Supplier: Dayton Superior
Mix Data: 1107 Advantage Grout Set No: RL-14-0098
Date Molded: 09/12/14 Date Received: 09/13/14
Condition Received: Good
Placement Location: Mock Up Wall Pipe
Cubic Yards Placed: 150 lbs.
Specimens Cast By: Lucas Hay
Time Specimens Made: 13:55 Mixer No: Lot# A40808023B
Mortar Temperature (C-1064): 82 °F Air Temperature: 78 ° F
Remarks: N/A

Strength Specification @ 28 days: 5,000 psi.

COMPRESSIVE STRENGTH DATA

Laboratory Number	Date Tested	Age (Days)	Cross Sectional Area (in^2)	Maximum Loads (lbs)	Compressive Strength (PSI)	Tech Initials
RL-14-0098 A	09/15/2014	3	4.00	21120	5280	LH
RL-14-0098 B	09/15/2014	3	4.00	22150	5540	LH
RL-14-0098 C	09/15/2014	3	4.00	21775	5440	LH
RL-14-0098 D	09/17/2014	5				
RL-14-0098 E	09/17/2014	5				
RL-14-0098 F	09/17/2014	5				
RL-14-0098 G	09/19/2014	7				
RL-14-0098 H	09/19/2014	7				
RL-14-0098 I	09/19/2014	7				
RL-14-0098 J	10/10/2014	28				
RL-14-0098 K	10/10/2014	28				
RL-14-0098 L	10/10/2014	28				

Technician: Lucas Hay Date: 09/12/14
Supervisor Signature: Date: 9-16-14

Form TP 2.8-1
Rev. 1

Page 1 of 1

12.0 Information from John Deere

12.1 John Deere 35G

Operating Dimensions	35G			
	1315-mm (4 ft. 4 in.) Standard Arm and Canopy	1715-mm (5 ft. 8 in.) Long Arm and Canopy	1315-mm (4 ft. 4 in.) Standard Arm and Cab	1715-mm (5 ft. 8 in.) Long Arm and Cab
A Maximum Cutting Height	4.87 m (16 ft. 0 in.)	4.95 m (16 ft. 3 in.)	4.70 m (15 ft. 5 in.)	4.74 m (15 ft. 7 in.)
B Maximum Dumping Height	3.46 m (11 ft. 4 in.)	3.57 m (11 ft. 9 in.)	3.31 m (10 ft. 10 in.)	3.39 m (11 ft. 1 in.)
C Maximum Digging Depth	3.06 m (10 ft. 0 in.)	3.46 m (11 ft. 4 in.)	3.06 m (10 ft. 0 in.)	3.46 m (11 ft. 4 in.)
D Maximum Digging Reach	5.21 m (17 ft. 1 in.)	5.52 m (18 ft. 1 in.)	5.21 m (17 ft. 1 in.)	5.52 m (18 ft. 1 in.)
E Minimum Front Swing Radius	2.08 m (6 ft. 10 in.)	2.19 m (7 ft. 2 in.)	2.24 m (7 ft. 4 in.)	2.30 m (7 ft. 7 in.)
F Transport Length	4.64 m (15 ft. 3 in.)	4.75 m (15 ft. 7 in.)	4.64 m (15 ft. 3 in.)	4.75 m (15 ft. 7 in.)
Digging Force (ISO)				
Arm	19.0 kN (4,277 lb.)	16.9 kN (3,792 lb.)	19.0 kN (4,277 lb.)	16.9 kN (3,792 lb.)
Bucket	27.1 kN (6,085 lb.)	27.1 kN (6,085 lb.)	27.1 kN (6,085 lb.)	27.1 kN (6,085 lb.)
Machine Dimensions				
G Upperstructure Width	1.55 m (5 ft. 1 in.)			
H Overall Height				
Canopy	2.48 m (8 ft. 2 in.)			
Cab	2.48 m (8 ft. 2 in.)			
I Track Width	300 mm (12 in.)			
J Undercarriage Width	1.74 m (5 ft. 9 in.)			
K Ground Clearance	280 mm (11 in.)			
L Tail Swing Radius				
With Standard Arm	870 mm (34 in.)			
With Long Arm and Extra Counterweight	980 mm (39 in.)			
M Engine Cover Height	1.53 m (5 ft. 0 in.)			
N Maximum Blade Lift Above Ground	360 mm (14.2 in.)			
O Maximum Blade Drop Below Ground	400 mm (15.7 in.)			
Blade				
Width	1.74 m (5 ft. 9 in.)			
Height	373 mm (14.7 in.)			
P Sprocket Center to Idler Center	1.66 m (5 ft. 5 in.)			
Q Undercarriage Length	2.11 m (6 ft. 11 in.)			
R Counterweight Clearance	550 mm (22 in.)			

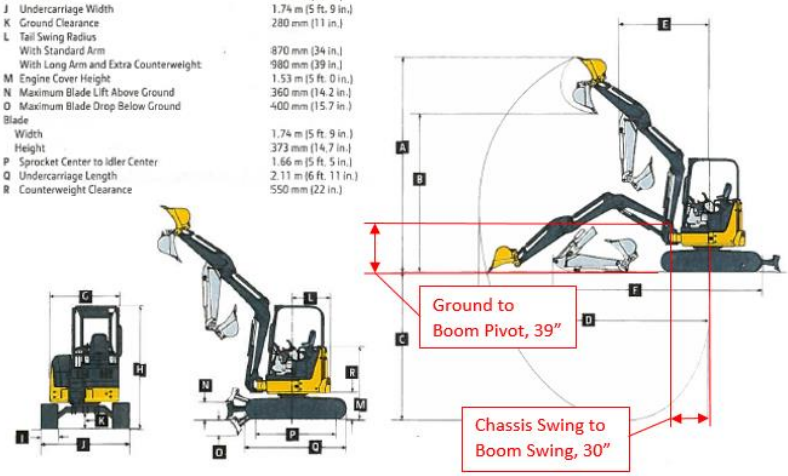

Figure 44 - John Deere 35G Boom Pivot Pin Location

Excavator Lift Capacity—KG (LB.)
(Canopy, Long Arm, Standard Counterweight, and Steel Track with Blade)

Arm: 1.71 m (5 ft. 8 in.)	Blade: 1.45 m (5 ft. 9 in.)	Bucket: 80.0 kg (176.4 lb.)	
Power Dig: On			
LIFTING OVER FRONT			
Load Point Height	Horizontal Distance From Centerline of Rotation		
m (ft.)	1.52 (5)	3.05 (10)	4.57 (15)
1.52 (5)		1024* (2257*)	803* (1771*)
Ground Line	822* (1812*)	1500* (3307*)	896* (1976*)
-1.52 (-5)	2287* (5042*)	1428* (3149*)	

35G Lift Capacities (canopy, long arm, standard counterweight, and steel track with blade)

* Hydraulically Limited Capacities

KR46781,00006FB -19-03JAN13-1/1

Figure 45 - John Deere 35G Lift Capacity Chart

12.2 John Deere 50G

Operating Dimensions	50G			
	1380-mm (4 ft. 6 in.) Standard Arm and Canopy	1690-mm (5 ft. 7 in.) Long Arm and Canopy	1380-mm (4 ft. 6 in.) Standard Arm and Cab	1690-mm (5 ft. 7 in.) Long Arm and Cab
A Maximum Cutting Height	5.75 m (18 ft. 10 in.)	6.00 m (19 ft. 8 in.)	5.75 m (18 ft. 10 in.)	6.00 m (19 ft. 8 in.)
B Maximum Dumping Height	4.07 m (13 ft. 4 in.)	4.31 m (14 ft. 2 in.)	4.07 m (13 ft. 4 in.)	4.31 m (14 ft. 2 in.)
C Maximum Digging Depth	3.53 m (11 ft. 7 in.)	3.83 m (12 ft. 7 in.)	3.53 m (11 ft. 7 in.)	3.83 m (12 ft. 7 in.)
D Maximum Digging Reach	5.96 m (19 ft. 7 in.)	6.26 m (20 ft. 6 in.)	5.96 m (19 ft. 7 in.)	6.26 m (20 ft. 6 in.)
E Minimum Front Swing Radius	2.21 m (7 ft. 3 in.)	2.30 m (7 ft. 7 in.)	2.21 m (7 ft. 3 in.)	2.30 m (7 ft. 7 in.)
F Transport Length	5.47 m (17 ft. 11 in.)	5.52 m (18 ft. 1 in.)	5.47 m (17 ft. 11 in.)	5.52 m (18 ft. 1 in.)
Digging Force (ISO)				
Arm	24.0 kN (5,401 lb.)	21.0 kN (4,718 lb.)	24.0 kN (5,401 lb.)	21.0 kN (4,718 lb.)
Bucket	36.8 kN (8,267 lb.)	36.8 kN (8,267 lb.)	36.8 kN (8,267 lb.)	36.8 kN (8,267 lb.)
Machine Dimensions				
G Upperstructure Width	1.85 m (6 ft. 1 in.)			
H Overall Height				
Canopy	2.53 m (8 ft. 4 in.)			
Cab	2.53 m (8 ft. 4 in.)			
I Track Width	400 mm (16 in.)			
J Undercarriage Width	2.00 m (6 ft. 7 in.)			
K Ground Clearance	340 mm (13 in.)			
L Tail Swing Radius				
With Standard Arm	1.00 m (39 in.)			
With Long Arm and Extra Counterweight	1.10 m (43 in.)			
M Engine Cover Height	1.59 m (5 ft. 3 in.)			
N Maximum Blade Lift Above Ground	460 mm (18 in.)			
O Maximum Blade Drop Below Ground	360 mm (14 in.)			
Blade				
Width	2.00 m (6 ft. 7 in.)			
Height	375 mm (15 in.)			
P Sprocket Center to Idler Center	2.00 m (6 ft. 7 in.)			
Q Track Length	2.50 m (8 ft. 2 in.)			
R Counterweight Clearance	610 mm (24 in.)			

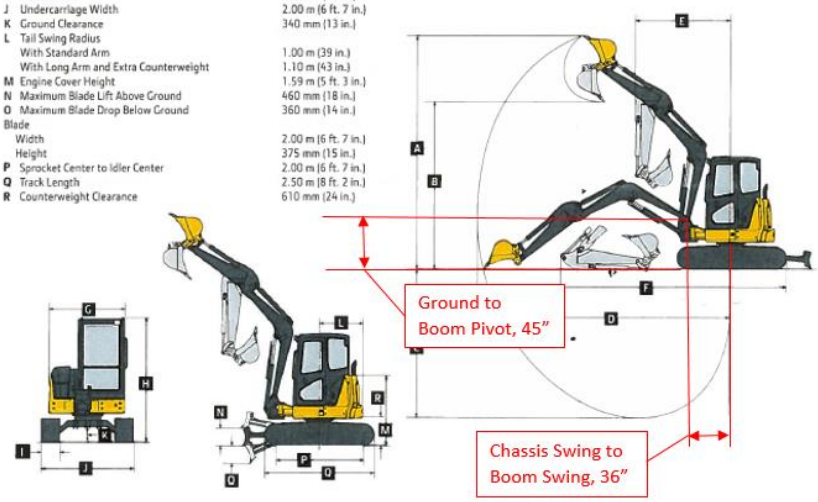

Figure 46 - John Deere 50G Boom Pivot Pin Location

Excavator Lift Capacity—KG (LB.)
(Canopy, Long Arm, Standard Counterweight, and Rubber Track with Blade)

-: 50G Lift Capacities (canopy, long arm, standard counterweight, and rubber track with blade)

Arm: 1.69 m (5 ft. 7 in.)	Blade: 2.00 m (6 ft. 7 in.)		Bucket: 115.0 kg (253.6 lb.)
Power Dig: On			
LIFTING OVER FRONT			
Load Point Height	Horizontal Distance from Centerline of Rotation		
m (ft.)	1.52 (5)	3.05 (10)	4.57 (15)
3.05 (10)			1034* (2280*)
1.52 (5)		1909* (4209*)	1218* (2686*)
Ground Line		2475* (5456*)	1388* (3060*)
-1.52 (-5)	2531* (5579*)	2199* (4848*)	

* Hydraulically Limited Capacities

Figure 47 - John Deere 50G Lift Capacity Chart