PRC-SRP-00027
Revision 0

DESIGN REPORT NARRATIVE FOR THE TRANSFER MECHANISM, KUR-1782F-RPT-024 R0 (300-296 Soil Remediation Project)

Prepared for the U.S. Department of Energy
Assistant Secretary for Environmental Management

Contractor for the U.S. Department of Energy
under Contract DE-AC06-08RL14788

P.O. Box 1600
Richland, Washington 99352

Approved for Public Release;
Further Dissemination Unlimited

PRC-SRP-00027
Revision 0
EDC#: ECR-16-001241

DESIGN REPORT NARRATIVE FOR THE TRANSFER MECHANISM, KUR-1782F-RPT-024 R0 (300-296 Soil Remediation Project)

Document Type: RPT Program/Project: 300-296 Soil Remediation Project

F. M. Blackburn
CH2M HILL Plateau Remediation Company

Date Published
October 2016

Prepared for the U.S. Department of Energy
Assistant Secretary for Environmental Management

Contractor for the U.S. Department of Energy
under Contract DE-AC06-08RL14788

P.O. Box 1600
Richland, Washington 99352

APPROVED
By Julia Raymer at 6:51 am, Nov 09, 2016

Release Approval Date

DATE:
Nov 09, 2016
HANFORD RELEASE

Release Stamp

Approved for Public Release;
Further Dissemination Unlimited

TRADEMARK DISCLAIMER

Reference herein to any specific commercial product, process, or service by tradename, trademark, manufacturer, or otherwise, does not necessarily constitute or imply its endorsement, recommendation, or favoring by the United States Government or any agency thereof or its contractors or subcontractors.

This report has been reproduced from the best available copy.

Printed in the United States of America

Total pages: 14

KUR-1782F-RPT-024

300-296 Soil Remediation Project

Final Design Report Narrative for the Transfer Mechanism

Revision: 0

Issue Date: July 9, 2015

Prepared for:

AREVA Federal Services LLC
Richland, Washington 99354

Prepared by:

KURION
Isolating Waste from the Environment

Kurion, Inc.
1355 Columbia Park Trail
Richland, Washington 99352

Approved By:

Earl R. Lloyd
Project Manager/Project Engineer

Approved By:

FOR M. COLE
Matt Cole
Lead Engineer
PER DELEGATION OF AUTHORITY EMAIL OF 7/2/15

Report Title: **Final Design Report Narrative for the Transfer Mechanism**

Project Title: **300-296 Soil Remediation Project**

Status: ☐ **In-Process** ☒ **Final**

Contains assumptions and/or inputs which require verification: ☐ **Yes** ☒ **No**

Report History

Revision #	Reason for Revision	Approvals/Date	
0	Issued for IFC/IFF	Originator:	Jacob Riesenweber 7/9/15
		Checker:	Matt Cole for M. Cole 7/9/15 #
		PM:	Earl Lloyd 7/9/15
		Other:	Dave Morley 7/9/15

PER DELEGATION OF AUTHORITY EMAIL OF 7/2/15.

Table of Contents

1.0 INTRODUCTION 1

2.0 INTENDED FUNCTION 1
- 2.1 Transfer Mechanism Cart 1
- 2.2 Transfer Mechanism Frame Assembly 2
- 2.3 Locking Through Tube Assembly 3
- 2.4 Controls 3

3.0 INSTALLATION LOCATION AND METHODS 4

4.0 DESCRIPTION OF FACILITY PREPARATION REQUIRED FOR INSTALLATION 6

5.0 SEQUENCING 6

6.0 DESCRIPTION OF INTERFACES 6

7.0 ASSOCIATED EQUIPMENT, ACCESSORIES, SPECIAL TOOLS, AND SPARE PARTS REQUIRED 7

8.0 EQUIPMENT DISPOSITION 7

9.0 REFERENCES 7

Figures

Figure 1 – Transfer Mechanism in B-Cell Doorway 1
Figure 2 – Transfer Mechanism Cart 2
Figure 3 – Transfer Mechanism Frame Assembly 3
Figure 4 – Transfer Mechanism Locking Through Tube Assembly 4
Figure 5 – Transfer Mechanism Inserted into 12-in. Penetrations 5
Figure 6 – Transportation Pin and Lifting Bail 6

Acronym List

Acronym	Definition
REA	Remote Excavator Arm

1.0 Introduction

The transfer mechanism is a cart and frame that sits in the B-Cell doorway and allows waste bins to be moved between the Airlock and B-Cell without use of the B-Cell cranes (Figure 1).

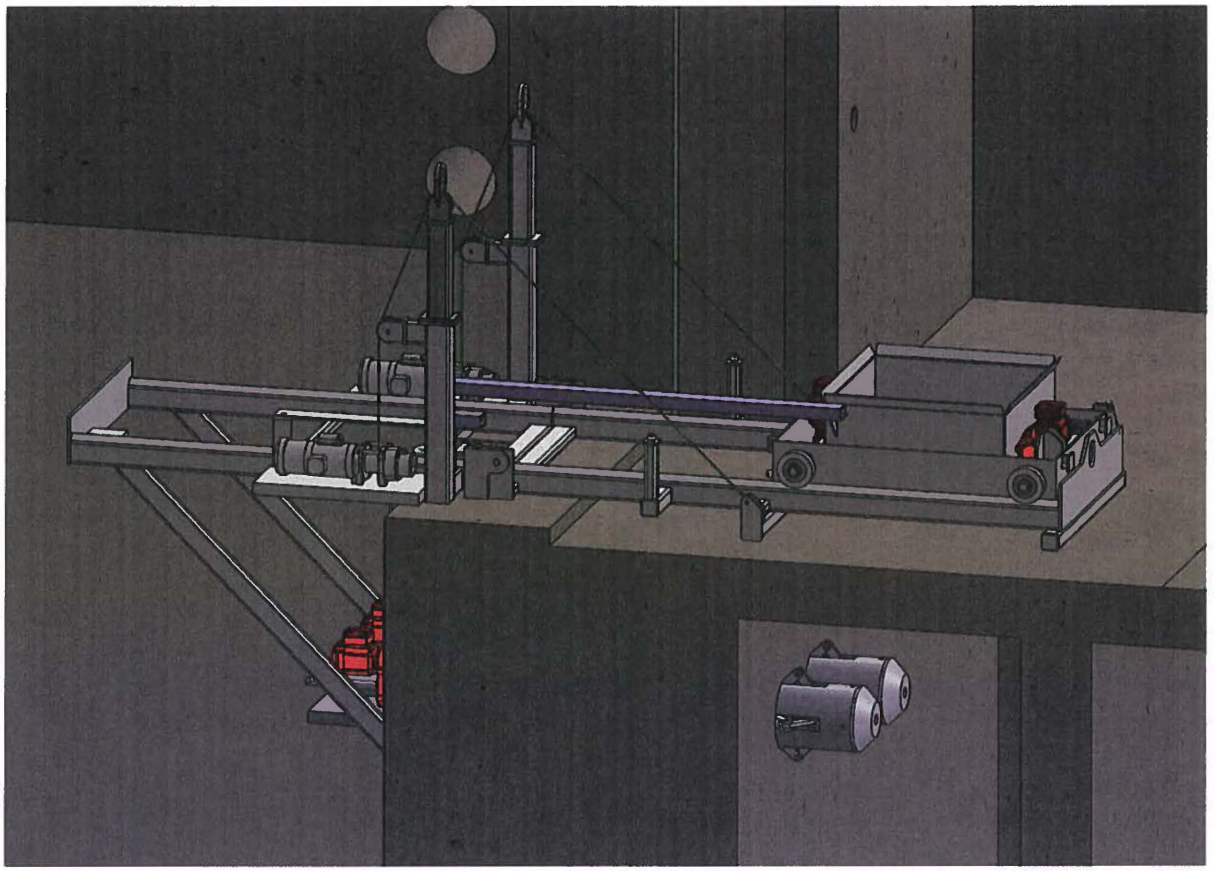

Figure 1 – Transfer Mechanism in B-Cell Doorway

2.0 Intended Function

The transfer mechanism's purpose is to assist in moving waste bins between the B-Cell and Airlock. An empty waste bin is loaded into the cart using the A/D cranes. The cart moves into the B-Cell. With the cart in the full travel position, the transfer mechanism aligns with the upper Remote Excavator Arm (REA) mounting locations on the north and south wall, allowing for easy removal using the upper REA. The upper REA holds the waste bin while it is loaded by the lower REA. When the bin is full, it is loaded into the transfer mechanism cart and shuttled into the Airlock. Once in the Airlock, the waste bin is picked up by the A/D cranes and moved to the desired location.

2.1 Transfer Mechanism Cart

The transfer mechanism cart runs on four v-groove wheels powered by two gear motors (Figure 2). These gear motors are sized for operational redundancy; if one motor fails, the other is sufficient to move the cart and allow for continued operation. End travel position switches are used as an indicator that the

cart has reached the end of the track. In the case of a failure of the end travel position switch, operation will continue with the operators using visual confirmation.

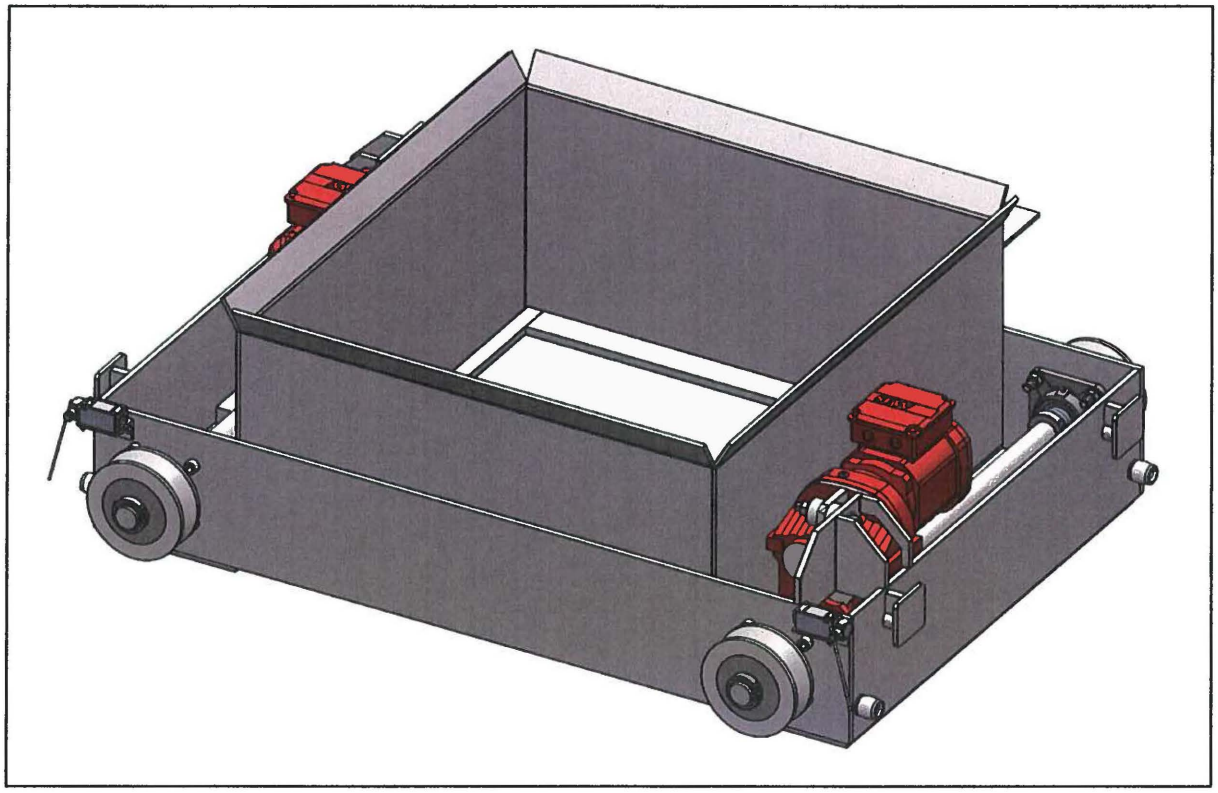

Figure 2 – Transfer Mechanism Cart

2.2 Transfer Mechanism Frame Assembly

The transfer mechanism frame has two parallel v-rails that the cart will run on (Figure 3). The B-Cell frame is the main structure that sits on the door threshold and against the B-Cell wall; the rails cantilever out into the B-Cell. The Airlock rail bridge is hinged and can be lifted up, out of the Airlock to allow the B-Cell door to close. This is actuated by two hoists. These hoists are sized for operational redundancy; if one hoist fails, the other will be sufficient to lift the rail bridge. In the case of a failure of both hoists, the cables can be cut using the Brokk or REA shear and the roller post removed. This allows the rail bridge to be actuated by the B-Cell crane.

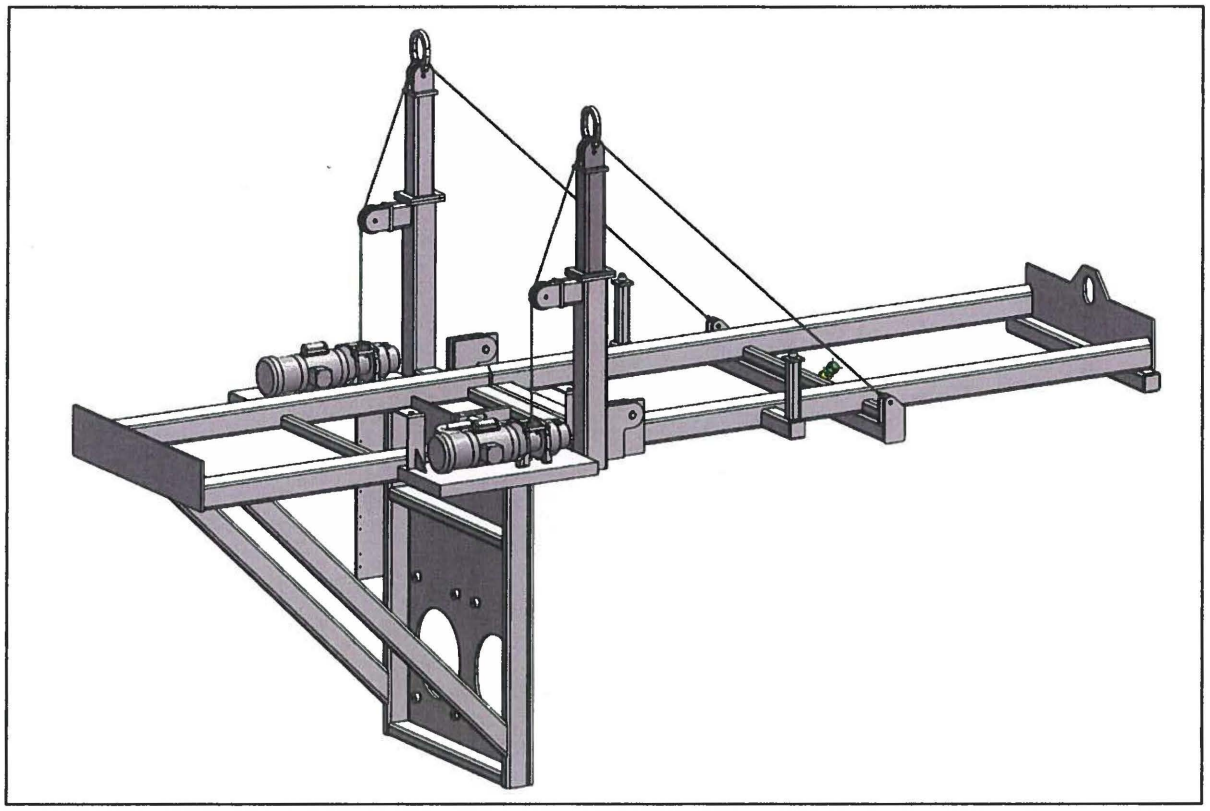

Figure 3 – Transfer Mechanism Frame Assembly

2.3 Locking Through Tube Assembly

The east wall of the B-Cell has two 12-in. penetrations directly under the B-Cell door which connect to the pipe trench in the Airlock (Figure 4). The locking through tube assemblies are designed to go through these penetrations, lock in place and hold the transfer mechanism in place while the load of the transfer mechanism cart is cantilevered into the B-Cell. Operation of the locking through tube assemblies is very similar to a molly bolt. After being inserted fully through the penetration, the lock motor will turn the central drive shaft causing the four locking pawls to expand, locking against the back of the wall. After installation occurs, the transfer mechanism should never need to be removed. However, if the transfer mechanism ever needed to be removed, the lock motors could be run in reverse to retract the locking pawls allowing the locking through tubes to slip back through the wall. If the motors fail to function, a hex is available on the end of the drive shaft that allows the lock to be operated by a crane-hung impact wrench.

2.4 Controls

All actuations for the transfer mechanism will be controlled with the main control system with operators located in the control trailer. For more detailed information on the controls see KUR-1782F-RPT-027 Rev 0.

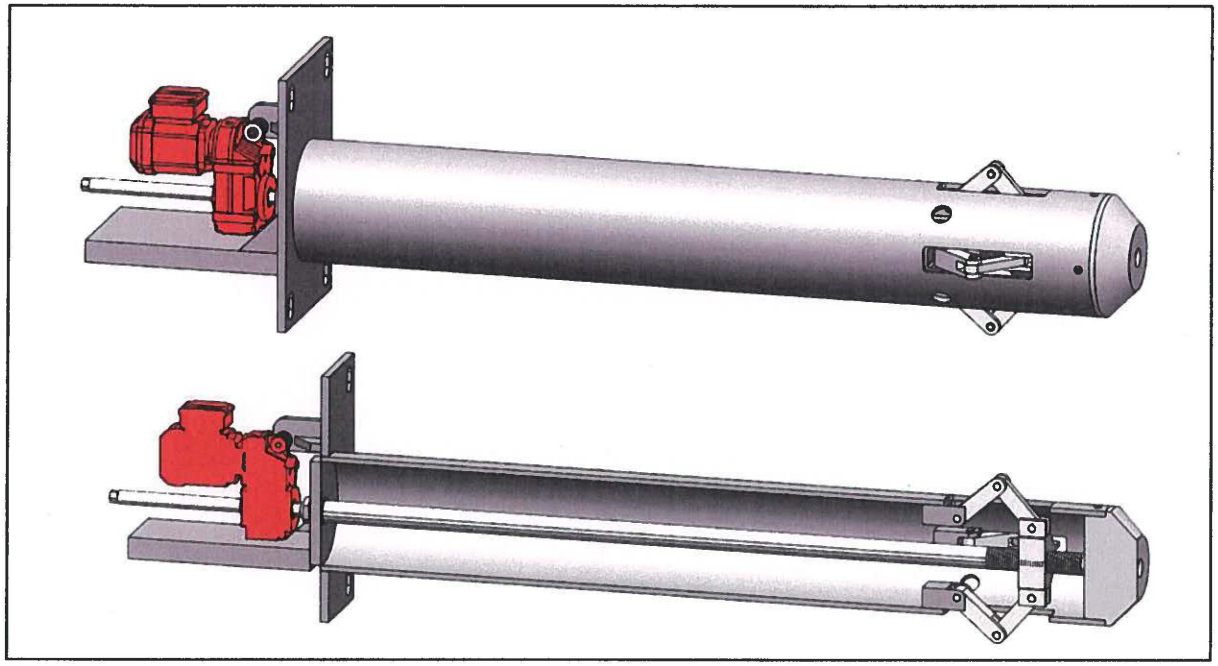

Figure 4 – Transfer Mechanism Locking Through Tube Assembly

3.0 Installation Location and Methods

Prior to installing the transfer mechanism the penetration below the B-Cell door must have any caps and other debris removed. The transfer mechanism will be moved into the Airlock fully assembled with the cart and locking through tubes installed. The transfer mechanism can be set on the ground supported by the through tubes or a simple stand (e.g. saw horses) can be installed into the airlock for temporary support. Final installation procedure will be fully developed during mockup. From there it will be lifted by the B-Cell Crane using the rotating bail attached to the frame, and then moved through the B-Cell doorway. The transfer mechanism will be held near a window and the electrical connection passing through the north wall will be connected to the bulkhead fittings on the transfer mechanism using a Master-Slave Manipulator. The cable entering from the gallery will include a lifting bail (installed by operation team) so the B-Cell crane can lift the cable to the window, the final configuration will be fully developed during mockup. After all connections have been made, the transfer mechanism will be moved to be centered in the door frame (Figure 5). The locking through tubes will be inserted into the 12-in. penetrations below the B-Cell door and moved east until the vertical wall plate is in contact with the B-Cell wall. The transfer mechanism has been balanced so the through tubes will be held horizontally however it is acknowledged that some dragging will occur as the through tubes are inserted into the penetration. It is acceptable for the Upper REA to assist in pushing the transfer barrier into the penetration as long as this is done carefully and force is applied only to the main frame structure and not to motors and other sensitive equipment. The transfer mechanism will then be lowered so the upper frame structures rest on the door threshold and the lock motors engage on the locking through tubes. This will tighten the locking pawls against the back of the penetration. The transportation pin can be removed and the Airlock rail bridge lowered (Figure 6). The transfer mechanism is now ready for normal operation.

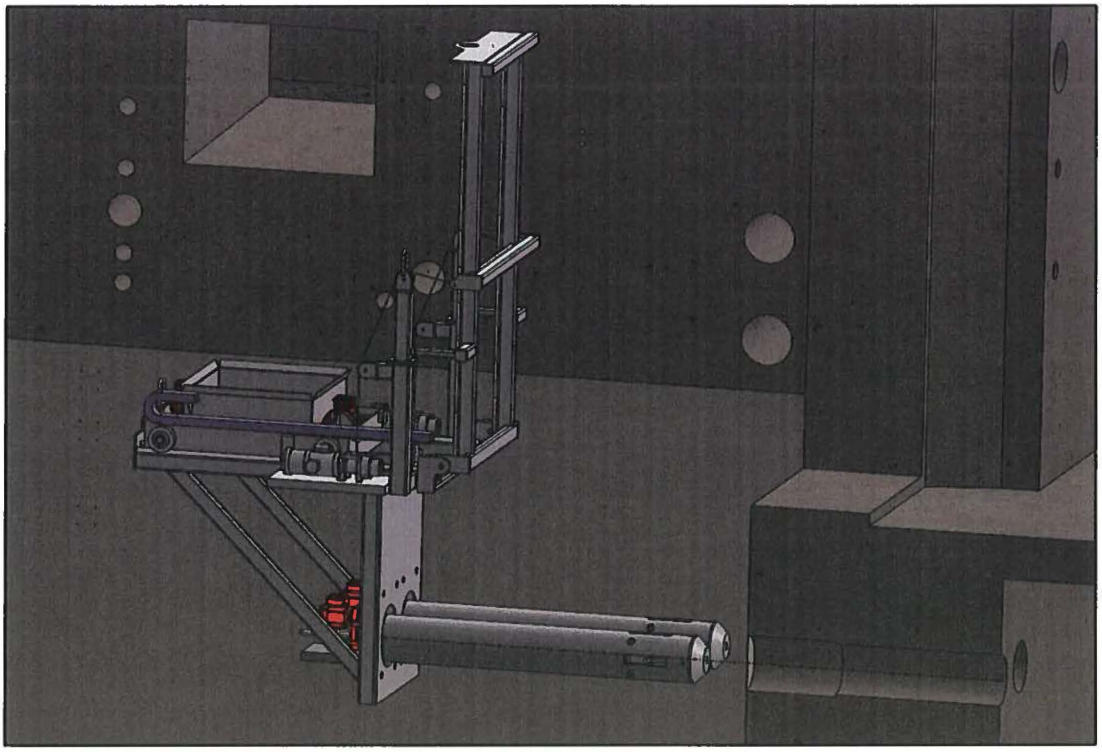

Figure 5 – Transfer Mechanism Inserted into 12-in. Penetrations

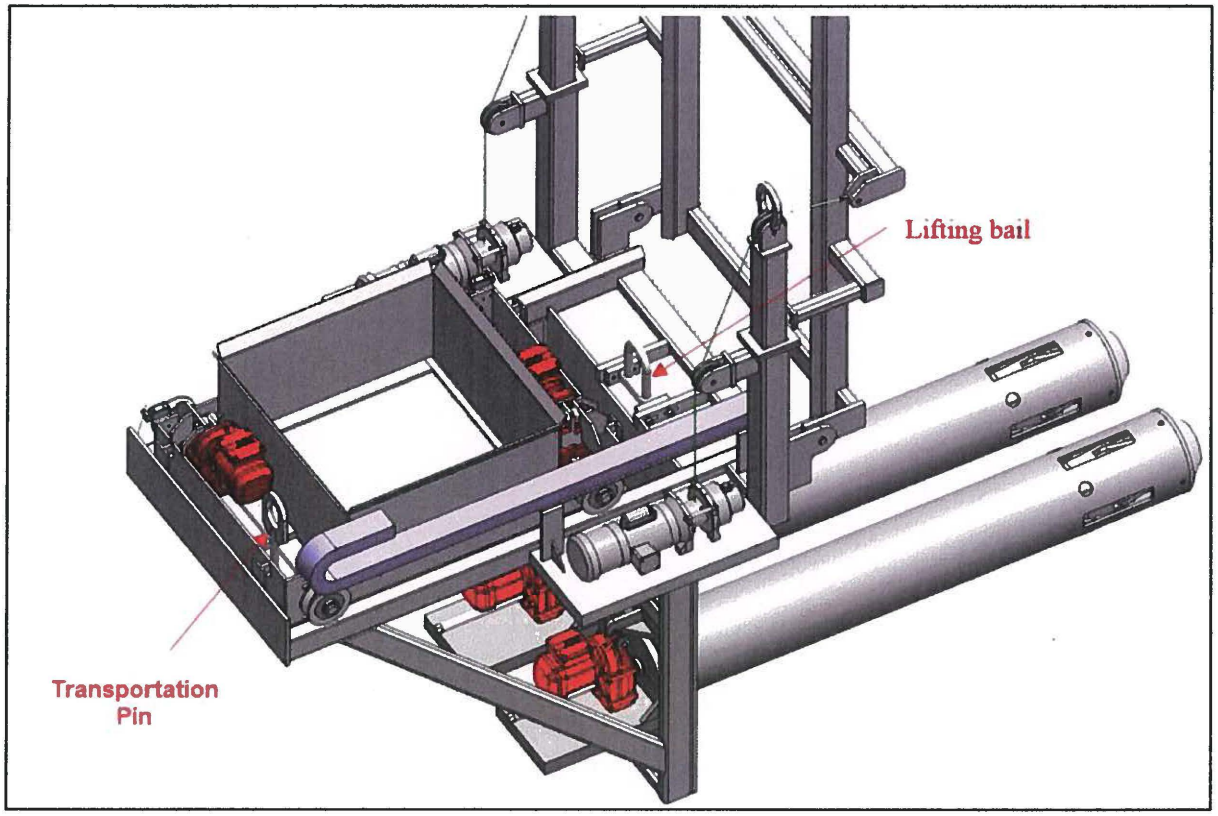

Figure 6 – Transportation Pin and Lifting Bail

4.0 Description of Facility Preparation Required for Installation

Removal of any caps or equipment in the penetration below the B-Cell door. Also, airlock should be cleared of any debris that would interfere with the installation of the transfer mechanism.

5.0 Sequencing

The transfer barrier should be installed after the REA's have been installed but prior to floor and soil removal.

6.0 Description of Interfaces

The following interfaces apply to the transfer mechanism:

- B-Cell MSMs and one B-Cell crane for installation of cables.
- Electrical power in the gallery.
- Locking through tube assembly to 12-in. penetration as shown on H-3-20277, *SST Liner Details Tank Areas and Pipe Trench Areas 1 & 3.*
- B-Cell crane for installation and raising and lowering the Airlock rail bridge in the case of hoist failure.

7.0 Associated Equipment, Accessories, Special Tools, and Spare Parts Required

As a backup, the tensioning screws on the through tubes are supplied with an auxiliary hex which allows these to be back driven. This can be done with a crane mounted torque wrench (not supplied in this design). These drive motors can apply a torque of 1240 in*lbs to the screw plus require 376 in*lbs to be back driven. Therefore, any torque wrench needs to supply at least 1616 in*lbs to back drive these screws.

8.0 Equipment Disposition

At the end of the project, the transfer mechanism will be discarded in place; mounted to the B-Cell doorway with the Airlock rail bridge retracted, to allow the B-Cell door to close.

9.0 References

H-3-20277, 1962, *SST Liner Details Tank Areas and Pipe Trench Areas 1 & 3*, U.S. Atomic Energy Commission, Richland, Washington.

KUR-1782F-DWG-M-REC-2000-000 Rev 0, *Transfer Mechanism Assembly,* Kurion, Inc., Richland, Washington.

KUR-1782F-RPT-027 Rev 0, *Final Design Report Narrative for the Remote Control System,* Kurion, Inc., Richland, Washington.